Disc Coupling Catalog

Download the most up-to-date version
at www.rexnord.com/documentation

Thomas Flexible Disc Couplings

(Metric)

Table Of Contents

DESCRIPTION **PAGE**

Application Guide. . . . 3
Flexible Coupling Overview . . . 4
Quick Coupling Selection Procedure . . . 5
Service Factors . . . 6
Ordering Instructions . . . 7

CLOSE COUPLED COUPLINGS
Series 54RDG. . . . 8
Series 54RD . . . 9
DBZ, DBZ-A, DBZ-B . . . 10

SPACER COUPLINGS
Series XTSR52 . . . 12, 13
Series XTSR71 . . . 14, 15
Tollok TLK603 . . . 16
AMR . . . 18
CMR. . . . 19, 20
BMR. . . . 21
Series 44.. . . . 22, 23

FLOATING SHAFT COUPLINGS
SN-GA . . . 24
Floating Shaft Coupling Types . . . 25
SN, SF, SV . . . 26, 27
SN Adjustable . . . 27

SINGLE FLEXING DISC COUPLINGS
ST . . . 28
SN Single . . . 29

HIGH PERFORMANCE COUPLINGS
THP . . . 30
Series 63 . . . 31

MINIATURE COUPLINGS
CC, CA . . . 32
CB, CBC. . . . 33
CE . . . 34

ADDITIONAL COUPLINGS AND TECHNICAL DATA
Backstop . . . 35
Series 52 . . . 36
Series 71 . . . 37, 38
Bore Specifications, Taper-Lock and Q.D. Bushings . . . 39
Customized Flexible Disc Couplings . . . 40, 41

Rexnord Thomas Coupling Application Guide

Coupling Type	Typical Applications	Coupling Type	Typical Applications
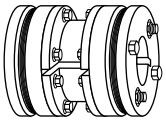 **Series 54RDG**	Close-coupled applications. Suitable as replacement for gear and grid couplings.	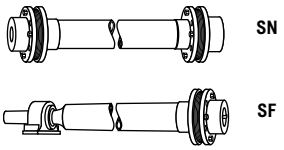 **SN** **SF**	Turbines, pumps, compressors, test stands, generators, speed increasers, fans (cooling tower, mine ventilating, forced and induced draft), paper mill drives, line shafts, printing machines, pumps. Available as a standard in corrosion-resistant materials.
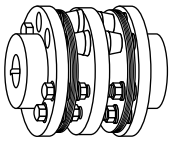 **DBZ, DBZ-A, DBZ-B**	Mixers, compressors, agitators, blowers and fans, centrifugal pumps, conveyors.	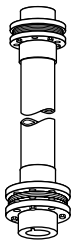 **SV**	Vertical drives such as sewage pumps, printing machines, marine pumps. Available as a standard in corrosion-resistant materials.
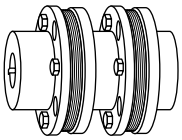 **Series XTSR52**	Pumps and compressors (centrifugal, rotary, lobe and axial), speed increasers, fans, dynamometers.		
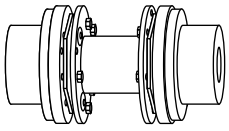 **Series XTSR71**	Pumps and compressors with popular shaft separation standards, blowers, fans, speed increasers.	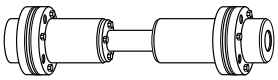 **Adjustable Length SN**	Same applications as SN but where axial and/or angular adjustment is desired.
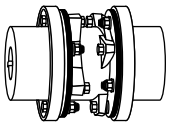 **AMR**	Reciprocating pumps and compressors, fan drives, blowers, heavy-duty industrial drives, crushers, extruders, hoists, dredges, generators, chippers, calenders, mill drives, conveyors.	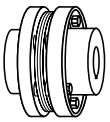 **ST**	Accommodates angular misalignment only. Three-bearing applications where radial load is supported by the coupling, such as single-bearing generators, V-belt sheaves, etc.
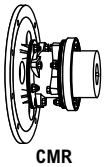 **CMR**	Engine drivers, reciprocating pumps and compressors, heavy-duty industrial drives where flywheel mounting is required.	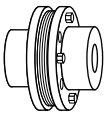 **SN Single**	Accommodates angular misalignment only. May be used with intermediate solid shaft for applications similar to BMR, but with high speed capacity. Available in corrosion-resistant materials.
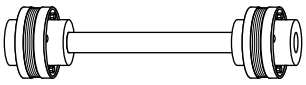 **BMR**	Blowers, fans, crushers, marine drives, dredge pumps, hoists, heavy-duty industrial drives, reciprocating pumps and compressors, paper mill drives, conveyors	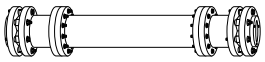 **THP**	Turbines, pumps, compressors, speed increasers, test stands.
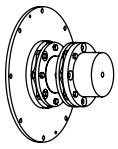 **Series 44**	Engine drivers, reciprocating pumps and compressors, heavy-duty industrial drives where flywheel mounting is required.	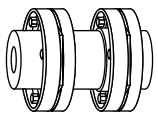 **Series 63**	Turbines, pumps, compressors, test stands, generators, speed increasers.
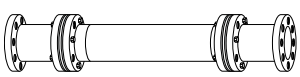 **SN-GA**	Pulp and paper machines, line shafts, pelletizers, crushers and mill drives. Replacing long span gear couplings, bolting to existing rigid hubs.	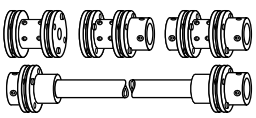 **Miniature Couplings**	Tachometers, encoders, switches, ball screws, test stands, pumps, compressors, centrifuges, theodolites, sonar, radar, scales, carburetors.

NOTE: Dimensions subject to change. Certified dimensions of ordered material furnished on request.

Rexnord Thomas Flexible Couplings

Flexible Coupling Overview

A flexible coupling is a device used to connect the ends of two shafts, transmit torque, and at the same time, accommodate slight misalignments which develop in service.

The primary functions of all flexible couplings are:

1. To transmit power from one shaft to another, efficiently and effectively.
2. To accommodate slight shaft misalignments which develop in service.

The secondary functions of flexible couplings are:

1. Protect connected equipment:
   a. Absorb shock, vibration and pulsations.
   b. Decrease cross load on bearings.
   c. Accept load reversals.
   d. Minimize backlash.
2. Minimize "installation" and "maintenance" difficulties. Shafts become misaligned during operation because of settling foundations, the effects of heat, vibration, etc. These misalignments take place in the form of angular misalignment, parallel misalignment or axial movement of the shafts; therefore, to get full service life from any flexible coupling, it is necessary to:
   a. Assure proper shaft alignment during initial installation.
   b. Occasionally check for and correct shaft misalignments during operation.

Misalignment Overview

Misaligned shafts not properly coupled are subject to severe stresses that damage bearings and seals. Any or all of the misalignments shown in the above diagrams are present in all connected drives; therefore, it is imperative that flexible couplings be used to avoid costly damage to your equipment.

Initial alignment of machinery is one of the most critical factors affecting coupling performance and reliability. Each particular style of coupling has its own misalignment capabilities. The installation and alignment instructions outline the initial alignment requirements. These initial values are approximately one-third of the total coupling misalignment capacity. This means that the coupling has ample reserve to compensate for operational misalignments which develop as a result of bearing wear, foundation settling, thermal growth, pipe strain, etc. However, the closer the initial alignment, the more reserve margin a coupling has to compensate for misalignments during the life of the machine. A coupling that operates with large amounts of misalignment will have a limited life, while a coupling operating within capacity will have infinite life.

The customer and coupling manufacturer must mutually select the correct size and type coupling for the application. Good service life will then become a reality if proper installation and alignment procedures are followed.

The following pages show basic coupling arrangements and load classifications based on years of experience in coupling applications in all phases of power transmission. Any unusual operating or misalignment conditions should be referred to Rexnord to assure proper selection of size and type of coupling.

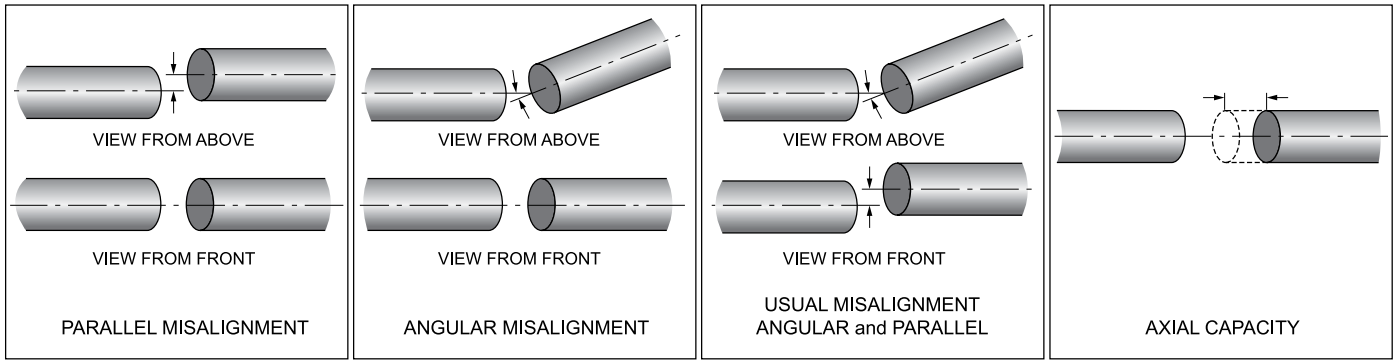

Maximum RPM and Balance Recommendations

Rexnord has developed recommendations for coupling balancing based on AGMA 9000-D11 and the inherent balance level of the various couplings shown in this catalog. These are shown on the data sheets as follows:

Max. RPM Not Balanced
This is the maximum operating speed where the coupling will operate under normal conditions, and not create unacceptable vibration due to coupling unbalance. This is based on many years of operating experience on a wide variety of drive systems.

Max. RPM Balanced
This is the maximum operating speed where the coupling, after balancing, will still be compatible with the typical drive system. Consult Rexnord for speed requirements in excess of this value; special designs or manufacturing procedures may be required.

Certain coupling types are not suitable for dynamic balancing, and should not be used if balancing is required. These types are AMR, CMR, BMR and ST.

Series 63 and THP couplings are always furnished dynamically balanced in accordance with the requirements of the application.

CAUTION: All rotating power transmission products are potentially dangerous and must be properly guarded. Never operate coupling without an OSHA-approved guard.

NOTE: Dimensions subject to change. Certified dimensions of ordered material furnished on request.

Rexnord Thomas Coupling Selection

Quick Coupling Selection Procedure

The following procedure can be used to select disc couplings for most applications.

For applications involving other than normal loading in design, special considerations must be given to coupling selection. Rexnord application engineers are readily available for selection, advice and assistance.

1. Select coupling type.

   Refer to page 3 and select the type of coupling to suit your application. If an application requires a special purpose coupling, refer application details to the local Rexnord Representative.

2. Calculate operating torque of application.

   a. Use the following formula to calculate operating torque of application:

   i. Torque (Nm) = $\frac{\text{Driver Kilowatts x 9,550}}{\text{Operating Speed}}$

3. Determine service factor.

   a. Find application in table on page 6; use the service factor value assigned to that application.

   b. Note: if application not listed, see Load Classification Table on page 6.

   c. Note: The service factor table considers the driven equipment only and assumes a normal electric or turbine driver. For prime movers of the reciprocating type (engines, etc) use the engine drive service factor adder on page 6 to the selected service factor.

4. Multiply operating torque by the selected service factor to determine minimum required torque rating of coupling.

5. Find coupling in the coupling type section of catalog that meets the minimum required torque rating.

6. Verify that the selected coupling will accommodate the shaft sizes or flywheel if engine mount, of driving and driven equipment. Shaft diameters should be equal or less than published maximum bore of selected coupling.

a. If coupling will not accommodate shaft sizes, select the next largest size that will accommodate shaft sizes.

7. Verify coupling selected can accommodate operating speed of application.

8. Check limiting data.

   a. Other data in coupling type section of catalog can be used to verify that selected coupling will work in application. Additional data can help verify application envelope of space, weight and WR^2 considerations.

IMPORTANT NOTE:
The coupling selection criteria is intended for the determination of the coupling and style only. It is also recommended that the system be analyzed for torsional and lateral stability using the specific mass elastic data available from Rexnord. The analysis is the responsibility of the user since the coupling is only a single component in the system.

Rexnord Thomas Coupling Nomenclature

Use the following nomenclature guide to identify and order Thomas Disc Couplings.

Coupling Size	Type/Series	Modifications	Distance Between Shaft Ends ("C" Length)	Hub Bore
2506	XTSR71	B	9.00	3.250 x 2.50

Type/Series		Modifications		Distance Between Shaft Ends ("C" Length)	Hub Bore
XTSR71	Current Adapter Series	B	= Balanced	9.00"	110 mm x Taper
XTSR52	Current Non-adapter Series	ES	= Engineered Special	N/A	1.00 x 2.00
DBZ	Close Coupled Series	L	= Long Hub	130 mm	Taper x 3.00
AMR	Heavy Duty Fixed Spacer Series	W	= Large Hub w/ adapter		etc.
CMR	Heavy Duty Flywheel Mount Spacer Series	C	= Special Coating (defined on drawings)		
SR54RDG	Close Coupled Series	D	= Special Disc Pack Material (defined on drawings)		
SN	Long Span Spacer Series	R	= Retrofit assembly (XTSR71 with special adapters to bolt up to John Crane or Thomas adapter hubs)		
THP	High Performance				
SR63	High Performance				
SR71	Adapter Series 6-bolt				
SR71-8	Adapter Series 8-bolt				
SR52	Non-adapter Spacer Series				

NOTE: Dimensions subject to change. Certified dimensions of ordered material furnished on request.

Rexnord Thomas Coupling Selection

Typical Service Factors – Motor And Turbine Driven Equipment*

Application	Service Factor
AGITATORS	
Pure Liquids	1.0
Variable Density	1.5
ALTERNATOR	1.5
BLOWERS	
Centrifugal	1.0
Lobe	1.5
Vane	1.5
BRIQUETTER MACHINES	2.0
CAN FILLING MACHINES	1.0
CANE KNIVES	2.0
CAR DUMPERS	2.5
CAR PULLERS	1.5
CLAY WORKING MACHINERY	2.0
COMPRESSORS	
Centrifugal	1.0
Lobe, Vane, Screw	1.5
Reciprocating - Multi-Cylinder	Consult Rexnord
Axial	1.0
CONVEYORS - uniformly loaded or fed	1.5
CONVEYORS - heavy duty - not uniformly fed	2.5
CRANES AND HOISTS	2.0
CRUSHERS	3.0
DREDGES	
Cable Reels	2.0
Conveyors	1.5
Cutter Head Drives	2.5
Jig Drives	2.5
Maneuvering Winches	2.0
Pumps	2.0
Screen Drives	2.0
Stackers	2.0
Utility Winches	1.5
ELEVATORS	
Bucket	2.0
Centrifugal Discharge	1.5
Escalators	1.5
Freight	2.0
Gravity Discharge	1.5
EXTRUDERS	
Plastic	2.0
Metal	2.5
FANS	
Centrifugal	
Forced Draft (Hostile Environment)	1.5
Induced Draft (Hostile Environment)	1.5
Axial	
Forced Draft (Hostile Environment)	1.5
Induced Draft (Hostile Environment)	1.5
Mine Ventilation	2.5
Cooling Towers	1.5
Light Duty Blower & Fans	1.0
FEEDERS	
Light Duty	1.5
Heavy Duty	2.5
FOOD INDUSTRY	
Beet Slicer	2.0
Cereal Cooker	1.5
Dough Mixer	2.0
Meat Grinders	2.0
Can Filling Machine	1.0
Bottling	1.5
GENERATORS	
Non-Welding	1.5
Welding	3.0
HAMMER MILLS	3.0
LUMBER INDUSTRY	
Barkers - Drum Type	2.5
Edger Feed	2.0
Live Rolls	2.0
Log Haul - Incline	2.0
Log Haul - Well Type	2.0
Off Bearing Rolls	2.0
Planer Feed Chains	2.0
Planer Floor Chains	2.0
Planer Tilting Hoist	2.0
Slab Conveyor	1.5
Sorting Table	1.5
Trimmer Feed	2.0
MACHINE TOOLS	
Bending Roll	2.0
Plate Planer	1.5
Punch Press - Gear Driven	2.0
Tapping Machines	2.5
Other Machine Tools	
Main Drives	1.5
Auxiliary Drives	1.5
METAL MILLS	
Draw Bench - Carriage	2.5
Draw Bench - Main Drive	2.5
Forming Machines	2.5
Slitters	2.0
Table Conveyors	
Non-Reversing	2.5
Reversing	3.0
Wire Drawing & Flattening Machine	2.0
Wire Winding Machine	2.0
MILLS, ROTARY TYPE	
Ball	2.5
Cement Kilns	2.0
Dryers & Coolers	2.0
Kilns	2.0
Pebble	2.0
Rod	2.0
Tumbling Barrels	2.0
MIXERS	
Concrete Mixers	2.0
Drum Type	2.0
OIL INDUSTRY	
Chillers	1.5
Oil Well Pumping	2.0
Paraffin Filter Press	2.0
Rotary Kilns	2.0
PAPER MILLS	
Barker Auxiliaries, Hydraulic	2.5
Barker, Mechanical	2.5
Barking Drum (Spur Gear Only)	2.5
Beater & Pulper	2.0
Bleacher	1.0
Calenders	2.0
Converting Machines, except	
Cutters, Platers	1.5
Couch	2.0
Cutters, Platers	2.0
Cylinders	2.0
Dryers	2.0
Felt Stretcher	1.5
Felt Whipper	2.0
Jordans	2.0
Log Haul	2.0
Presses	2.0
Reel	1.5
Stock Chests	1.5
Suction Roll	2.0
Washers and Thickeners	1.5
Winders	1.5
PRINTING PRESSES	1.5
PULLERS	
Barge Haul	2.0
PUMPS	
Centrifugal	
General Duty (Liquid)	1.0
Boiler Feed	1.5
Slurry (Sewage, etc.)	1.5
Dredge	2.0
Reciprocating	
Double Acting	2.0
Single Acting	
1 or 2 Cylinders	2.5
3 or more Cylinders	2.0
Rotary - Gear, Lobe, Vane	1.5
RUBBER INDUSTRY	
Mixer - Banbury	3.0
Rubber Calendar	2.0
Rubber Mill (2 or more)	2.5
Sheeter	2.0
Tire Building Machines	2.5
Tire & Tube Press Openers	1.0
Tubers and Strainers	2.0
SCREENS	
Air Washing	1.0
Rotary - Stone or Gravel	1.5
Traveling Water Intake	1.5
Vibratory	2.5
SEWAGE DISPOSAL EQUIPMENT	1.5
SEWAGE TREATMENT PUMPS	1.5
TEXTILE INDUSTRY	
Batchers	1.5
Calenders	2.0
Card Machines	1.5
Cloth Finishing Machines (washers, pads, tenters) (dryers, calenders, etc.)	1.5
Dry Cans	2.0
Dryers	1.5
Dyeing Machinery	1.5
Looms	1.5
Mangles	1.5
Nappers	1.5
Soapers	1.5
Spinners	1.5
Tenter Frames	1.5
Winders (Other than Batchers)	1.5
WINDLASS	2.0
WOODWORKING MACHINERY	1.5

*Service Factors in this table are for driven equipment based on smooth prime movers such as electric motors and turbines. For reciprocating prime movers, such as diesel or gas engines, add the following to the Service Factor:

For 8 or more cylinders, add 0.5.
For 6 cylinders, add 1.0.
For 4 cylinders, add 1.5.
For less than 4 cylinders, consult Rexnord.

Service Factors – Service Factors are a means of classifying different equipment and applications into various load classifications. Due to variations in application of equipment, service factors are used to adjust equipment ratings to accommodate for variable loading conditions.

	Load Classifications	Service Factors
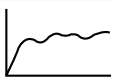	Continuous service and running loads vary only slightly.	1.0
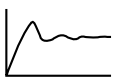	Torque loading varies during operation of the equipment.	1.5
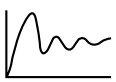	Torque loading varies during operation, frequent stop/start cycles are encountered.	2.0

	Load Classifications	Service Factors
	For shock loading and substantial torque variations.	2.5
	For heavy shock loading or light reversing drives.	3.0
	Reversing torque loads do not necessarily mean reversal of rotation. Depending upon severity of torque reversal, such loads must be classified between "medium" and "extreme."	Consult Rexnord

Ordering Instructions

Complete steps 1 through 6 below. See page 37 for types of fits and shaft diameters.

1. Determine quantity.
2. Determine coupling size and type.
3. Determine bore sizes. Couplings will be bored in accordance with ANSI/AGMA 9112-A04. The type of bore fit normally supplied by Rexnord is listed below.

Bore Specifications

DBZ	Straight Bore – Clearance fit – stocked Straight Bore – Interference fit on bore-to-order sizes ① Taper Bore – To customer specification
AMR, BMR, CMR, SN, SF, SV, ST, 52, 54RDG, 54RD, 71, 71-8, XTSR52, XTSR71	Straight Bore – Interference fit on all bores ① Taper Bore – To customer specification
Series 63/THP	All bores per customer specification
Miniatures	See pages 30-32.

① Unless specified otherwise by customer.

NOTE: Rexnord recommends an interference fit be used whenever possible.

4. Determine keyway and set screw sizes (if non-standard).
5. Determine dynamic balancing (if required).
6. Additional data (where applicable).
   a. Disc pack material (if other than Tomaloy).
   b. Free or interference fit on shafts (if shaft diameters are given).
   c. Complete details on tapered bore requirements, see supplemental taper bore information section below.
   d. On DBZ-A Couplings:
      1. Identify bore of standard hub and bore of extended hub.
   e. On SN, SF, and SV Couplings:
      1. Corrosion resistance class
      2. "L" dimension
      3. Dynamic balancing if required
      4. Sketch of stub shaft (SF only) if non-standard
      5. On SV, identify bore of upper hub and lower hub
      6. Operating speed required
   f. On BMR Couplings:
      1. Solid shaft diameter, if ordered
      2. "L" dimension
   g. On CMR Couplings:
      1. Adapter:
         (a) Outside diameter
         (b) Bolt circle diameter
         (c) Bolt hole diameter
         (d) Number of bolts and spacing

Ordering Information – Tapered Bores

Information Required

1. Drawing of hub showing complete bore and keyway details.

- OR -

2. Drawing of shaft with dimensions shown below, allowing Rexnord to bore hubs to suit.

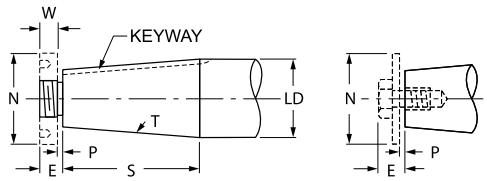

(LD) Large diameter, specify in decimals.

(S): Length of taper; measure parallel to shaft centerline.

(T): Taper per foot; difference in diameter in one foot length.

(P): Clearance space for drawing hub up on tapered shaft. Usually 1/8 in. or 1/4 in., depending on shaft size and taper.

Keyway: Width, depth.

NOTE: Specify if keyway is parallel to taper or if parallel to shaft center line. Specify depth at larger diameter of taper if keyway is parallel to shaft center line.

Supplemental Taper Bore Information

With connected equipment in fixed position, the following additional information is necessary:

Dimensions "V" and "X" must be given when one or both connected machines are fixed on their bases. Advise if dimension "X" is fixed, or if variable between what limits.

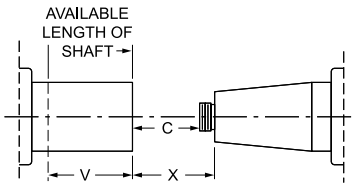

A fixed "X" dimension may require altered or special coupling hubs. Often the straight bored hub can be positioned on its shaft allowing the use of a standard coupling. See illustrations below.

Consult AGMA Standard 9002-A86 "Taper Bores for Flexible Couplings" for new applications.

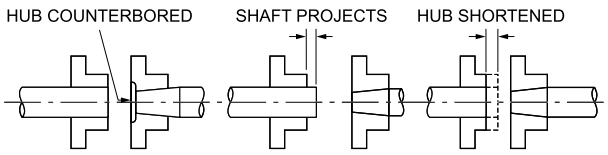

Rexnord Thomas Flexible Disc Couplings

Close-Coupled Series 54RDG

Series 54RDG couplings are reduced diameter gear and grid replacement couplings. Applications include any situation where the overall shaft-to-shaft spacing is minimal. The center member of the 54RDG is split axially, which permits maintenance of the couplings without moving the hubs or the connected equipment. Center member is piloted into the adapter providing high-speed potential at high-torque density.

Construction

Hubs and Center members: Carbon steel
Bolts: Alloy steel
Disc Packs: Stainless steel
Coatings Available: Consult Rexnord
Other disc pack materials such as Tomaloy, Monel and Inconel are available; please consult Rexnord.
Misalignment: ⅓° per disc pack

When specified, Series 54RDG couplings meet all requirements of API 610 or API 671.
If application requires API specification, please consult Rexnord.

General Dimensions (mm)

Coupling Size	Max. Bore* Internal	Max. Bore* External	A	B	C	C1**	F	F1**	H	N	G	C2***	F2***
125	30	34	97	47.8	3.0	44.5	98	126	4.3	6.9	45	85.9	152
162	42	50	114	47.8	3.0	45.0	98	137	4.3	7.4	59	86.9	176
200	58	58	141	53.8	3.0	49.8	111	156	5.6	9.1	83	96.5	201
225	65	70	149	55.6	3.0	51.6	114	174	5.6	9.1	89	100.1	233
262	74	84	175	65.8	4.8	61.5	136	200	6.4	11.9	105	118.1	264
312	95	97	199	72.1	4.8	66.5	149	225	7.6	12.7	127	128.3	300
350	100	110	223	83.3	6.4	77.7	173	256	5.6	13.7	140	149.1	340
375	114	120	247	90.4	6.4	82.8	187	275	6.4	15.0	154	159.3	363
425	120	130	267	100.8	6.4	91.7	208	301	7.6	15.7	167	177.0	393
450	130	140	287	114.3	7.9	105.4	236	334	11.9	18.0	178	202.9	432
500	137	146	327	121.4	7.9	109.7	251	358	12.7	19.8	200	211.6	466
550	150	166	367	136.4	9.7	123.7	282	400	14.7	23.1	222	237.7	517
600	166	176	406	152.4	9.7	137.2	314	442	17.0	24.9	237	264.7	570
700	195	205	464	177.8	9.7	158.0	365	514	19.1	30.5	276	306.3	662
750	206	224	503	196.9	12.7	177.8	406	565	21.3	32.3	299	342.9	724
800	223	241	546	209.6	12.7	187.2	432	606	23.1	34.0	318	361.7	781
850	235	250	584	225.6	14.2	202.4	465	650	25.4	35.6	335	390.7	835
925	248	267	635	251.7	15.7	226.3	519	719	27.7	38.1	359	436.9	920

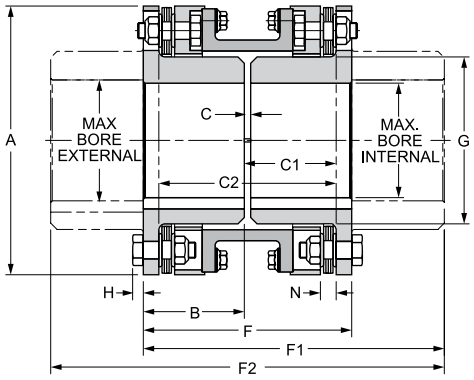

* Uses Series 52 hubs. Non-bored hubs available upon request.
** Hubs may be reversed for alternate shaft spacing.
*** Both hubs reversed.

Coupling Size	Max. Kilowatt Per 100 RPM	Max. RPM		Max. Continuous Torque (Nm)	Peak Overload Torque (Nm)	② Weight (kg)	② WR² (kg-m²)	③ Axial Capacity (mm)
	Service Factor 1.0	① Not Balanced	① Balanced					
125	3.2	4,600	10,500	305	610	3.1	0.0037	±0.91
162	6.3	4,200	9,700	604	1,209	4.2	0.0070	±0.91
200	12.4	3,800	8,600	1,185	2,370	7.3	0.0196	±0.91
225	20.7	3,700	8,400	1,976	3,952	8.6	0.0249	±0.91
262	38.8	3,600	7,400	3,706	7,412	14.1	0.0562	±1.09
312	60.8	3,000	6,700	5,803	11,606	20.9	0.112	±1.29
350	79.2	2,800	6,200	7,552	15,104	30.0	0.202	±1.42
375	118.7	2,500	5,800	11,323	22,646	40.0	0.339	±1.57
425	158.9	2,300	5,400	15,161	30,322	53.1	0.521	±1.70
450	178	2,200	5,000	16,979	33,958	69.9	0.787	±1.82
500	291.5	2,000	4,600	27,817	55,634	101.7	1.45	±2.02
550	390.9	1,900	4,200	37,300	74,600	147.1	2.62	±2.33
600	513.3	1,800	3,900	48,973	97,946	198.4	4.36	±2.59
700	798.4	1,700	3,600	76,242	152,484	298.3	8.49	±2.92
750	992.5	1,550	3,400	94,772	189,543	380.9	12.70	±3.17
800	1276.3	1,450	3,200	121,877	243,753	472.2	18.70	±3.45
850	1506.2	1,350	3,000	143,830	287,659	572.0	26.01	±3.65
925	2039.9	1,300	2,800	194,786	389,572	767.3	40.96	±3.96

① See page 4 for explanation of RPM limits and balancing recommendations.
② Weight and WR² with standard length hubs, maximum bore and standard "C."
③ All Thomas disc couplings meet NEMA frame sleeve bearing motor specifications without modifications or the addition of end-float restricting devices.

NOTE: Dimensions subject to change. Certified dimensions of ordered material furnished on request.

Thomas Flexible Disc Couplings
Close-Coupled Series 54RD

Series 54RD couplings are specifically designed as replacements for close-coupled gear and grid couplings, and where overall shaft-to-shaft spacing is minimal. Materials of construction are identical to the Series 52. Stainless steel disc packs are supplied as standard.

To reduce maintenance costs, the Series 54RD is furnished with an axially split center member. This design permits the removal of the disc packs without moving the connected equipment. When specified, and based on speed requirements, the Series 54RD can be manufactured to meet API 610. If application requires API specification, please consult Rexnord.

General Dimensions (mm)

Coupling Size	Max Bore* Internal (mm)	Max Bore* External (mm)	A	B	C	C1**	F	F1**	H	N	G	C2***	F2***
125	20	34	94	47	3.1	43.4	97	137	4.3	6.9	44	83.8	177
162	42	50	110	48	3.1	45.0	99	140	4.3	7.4	59	86.9	182
200	58	58	138	54	3.1	50.0	111	158	5.6	9.1	83	96.5	190
225	65	70	145	56	3.1	51.6	114	163	5.6	9.1	89	100.1	211
262	74	84	168	66	4.8	61.5	136	193	6.4	11.9	105	118.1	250
312	95	97	198	72	4.8	66.6	149	211	7.6	12.7	127	128.3	273
350	100	110	221	83	6.4	77.7	173	244	8.6	13.7	140	149.1	316
375	114	120	246	90	6.4	83.1	187	264	9.9	15.0	154	159.3	340
425	120	130	267	101	6.4	91.7	208	293	10.7	15.8	167	177.0	379
450	130	140	287	114	7.9	105.7	236	334	11.9	18.0	178	203.0	432
500	137	146	327	120	7.9	108.5	248	348	12.7	19.8	200	208.5	448
550	150	166	367	135	9.7	122.2	279	392	14.7	23.1	222	234.7	504
600	166	176	406	152	9.7	136.9	314	442	17.0	24.9	236	264.7	569
700	195	205	464	178	9.7	158.0	365	514	19.1	30.2	276	306.3	662
750	206	224	503	197	12.7	177.8	406	572	21	32.3	298	342.9	737
800	223	241	546	210	12.7	187.2	432	606	23	34.0	318	361.7	781
850	235	250	584	226	14.2	202.4	465	654	25	35.6	335	390.7	842
925	248	267	635	252	15.8	226.3	519	730	28	38.1	359	436.9	940
1000	264	290	699	273	15.8	244.4	562	790	29	42.9	413	465.3	1019

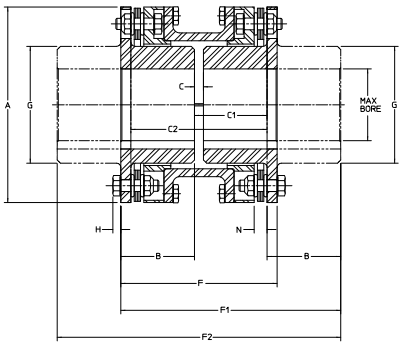

* Non-bored hubs available upon request.
** Hubs may be reversed for alternate shaft spacing.
*** Both hubs reversed.
NOTE: When hub is used with barrel positioned outside of spacer, a Series 52 hub is used.

Coupling Size	Max. Kilowatt Per 100 RPM	Max. RPM		Maximum Continuous Torque (Nm)	Peak Overload Torque (Nm)	② Weight (kg)	② WR^2 (kgm^2)	① Axial Capacity (mm)
	Service Factor 1.0	Not Balanced	③ Balanced					
125	2.8	4,600	7,200	263	526	3.0	0.0035	±0.91
162	5.2	4,200	7,000	492	984	4.4	0.0070	±0.91
200	10.0	3,800	6,300	958	1,917	7.3	0.0190	±0.91
225	12.7	3,700	6,000	1,208	2,416	8.2	0.0234	±0.91
262	20.7	3,600	5,500	1,976	3,951	14.1	0.0524	±1.09
312	28.7	3,000	5,000	2,743	5,487	21.5	0.117	±1.29
350	40.3	2,800	4,500	3,850	7,699	31.0	0.207	±1.42
375	60.4	2,500	4,000	5,769	11,538	42.9	0.363	±1.57
425	85.5	2,300	3,700	8,162	16,324	56.8	0.562	±1.70
450	97.2	2,200	3,400	9,280	18,559	74.9	0.849	±1.82
500	147	2,000	3,300	13,999	27,997	109	1.586	±2.02
550	254	1,900	2,800	24,272	48,544	158	2.870	±2.33
600	318	1,800	2,500	30,368	60,736	217	4.828	±2.59
700	409	1,700	2500	39,061	78,121	324	9.334	±2.92
750	552	1,550	2,200	52,721	105,441	402	13.489	±3.17
800	686	1,450	2,100	65,478	130,955	499	19.751	±3.45
850	838	1,350	1,950	80,041	160,081	663	30.138	±3.65
925	1120	1,300	1,850	106,909	213,818	890	47.401	±3.96
1000	1537	1,200	1,750	146,760	293,520	1,108	72.272	±4.36

For larger sizes, consult Rexnord.
① All Thomas disc couplings meet NEMA frame sleeve bearing motor specifications without modifications or the addition of end-float restricting devices.
② Weight and WR^2 at maximum bore.
③ For higher speeds, consult Rexnord.

NOTE: Dimensions subject to change. Certified dimensions of ordered material furnished on request.

Rexnord Thomas Flexible Disc Couplings

Close-Coupled Types DBZ, DBZ-A, DBZ-B

The standard DBZ coupling has two hubs inverted inside the disc pack and is used where overall shaft to shaft spacing is minimal.

DBZ style has both hubs with inverted orientation.
DBZ-A style has one hub extended to permit taper boring.
DBZ-B style has both hubs extended to allow for greater spacing where required.

Construction

Hubs and Center Assembly: Carbon steel
Bolts: Alloy steel
Disc Packs: Tomaloy
Coatings Available: Consult Rexnord

Other disc pack materials such as stainless steel, Monel and Inconel are available; please consult Rexnord.
Misalignment: ½° per disc pack

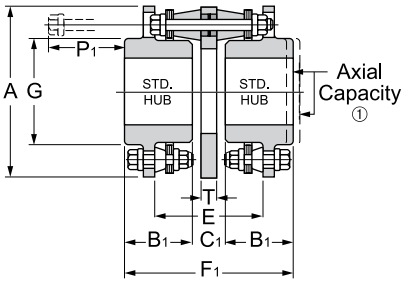

DBZ

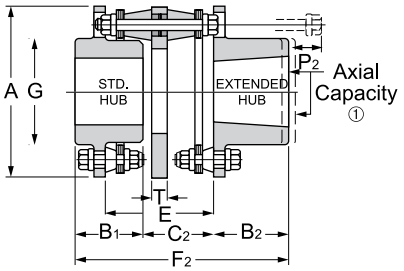

DBZ-A
(one standard and one extended hub)*

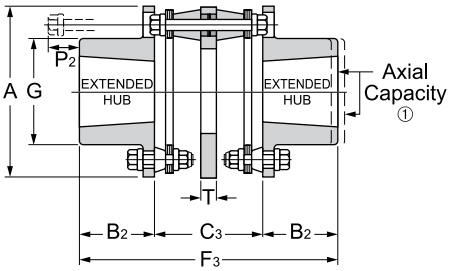

DBZ-B
(two extended hubs)*

General Dimensions (mm)

Coupling Size	Standard Hub Max. Bore	Extended Hub Max. Bore	A	B_1	B_2	C_1	C_2	C_3	E	F_1	F_2	F_3	G	P_1	P_2	T
50	15	15	51	22	22	8.1	21.3	34.5	34.5	52.8	66.0	79.2	25	32	20	4.8
62	17	17	62	28	28	9.7	26.7	43.7	43.7	65.0	82.0	99.1	30	40	27	6.4
75	20	20	68	28	28	9.4	26.9	44.5	44.5	66.3	83.8	101.3	37	40	27	6.4
101	27	28	82	35	35	17.5	35.3	52.8	52.8	87.6	105.4	122.9	43	43	25	7.9
126	35	35	98	38	41	24.4	43.2	62.2	62.2	100.6	122.4	144.5	52	51	29	10.4
163	50	50	116	43	48	24.1	43.2	62.2	62.2	110.0	133.9	157.7	70	46	22	10.4
201	55	58	136	49	54	24.4	49.8	75.2	75.2	122.9	152.9	182.9	83	59	29	14.2
226	64	70	154	60	67	31.0	64.3	97.5	97.5	151.9	191.3	230.6	96	68	29	16.8
263	78	81	178	70	76	33.3	71.4	109.5	109.5	173.0	217.4	261.9	113	76	32	19.1
301	84	95	203	79	87	38.1	81.0	124.0	124.0	196.6	247.7	298.7	129	90	40	21.3
351	97	110	238	94	103	45.7	98.0	150.4	150.4	233.2	294.9	356.6	148	114	52	26.9
401	110	120	272	106	117	49.3	109.7	170.2	170.2	262.1	333.5	404.9	168	130	59	30.2
451	130	130	308	121	133	53.8	119.9	184.9	184.9	296.2	373.9	451.6	187	138	60	34.0

Coupling Size	Max. Kilowatts Per 100 RPM	Max. RPM		Max. Continuous Torque (Nm)	Peak Overload Torque (Nm)	② Weight (kg)			② WR^2 ($kg\text{-}m^2$)			① Axial Capacity (mm)
	Service Factor 1.0	Not Balanced	Balanced			DBZ	DBZ-A	DBZ-B	DBZ	DBZ-A	DBZ-B	
50	0.2	6,000	9,000	16	25	0.3	0.3	0.3	0.0001	0.0001	0.0001	±0.58
62	0.3	6,000	8,200	28	42	0.7	0.7	0.7	0.0002	0.0002	0.0002	±0.71
75	0.4	6,000	7,800	40	60	0.9	0.9	0.9	0.0004	0.0004	0.0004	±0.81
101	0.8	6,000	7,100	78	118	1.5	1.5	1.5	0.0013	0.0013	0.0013	±0.96
126	1.5	5,500	6,500	142	215	2.5	2.5	2.6	0.0029	0.0030	0.0030	±1.16
163	2.0	5,000	6,000	192	294	3.8	3.9	4.0	0.006	0.006	0.006	±1.44
201	3.6	4,600	5,500	341	508	6.5	6.5	7.0	0.016	0.016	0.016	±1.70
226	6.5	4,100	5,200	621	938	9.5	10.0	10.4	0.028	0.028	0.031	±1.93
263	10.2	3,700	4,800	972	1458	15.0	15.4	15.9	0.058	0.061	0.061	±2.26
301	15.3	3,300	4,500	1458	2192	22.7	23.6	24.5	0.107	0.110	0.113	±2.59
351	26.7	2,900	4,100	2553	3830	37.7	39.5	40.9	0.268	0.274	0.282	±2.99
401	39.3	2,700	3,900	3751	5627	56.8	56.8	61.3	0.499	0.500	0.500	±3.45
451	51.4	2,600	3,600	4904	7355	77.2	81.7	81.7	0.927	0.928	0.957	±3.91

① All Thomas disc couplings meet NEMA frame sleeve bearing motor specifications without modifications or the addition of end-float restricting devices.
② Weight and WR^2 at maximum bore.
* Extended hubs can be supplied with straight bores or taper bores.

NOTE: Dimensions subject to change. Certified dimensions of ordered material furnished on request.

Notes

Rexnord Thomas Flexible Disc Couplings

Thomas XTSR52 Spacer Type Series Coupling with Optional Adapter

Optimized design and construction include stainless disc packs and corrosion protection; additional modifications may be made to reduce coupling weight, or special mountings to make it an economical alternative to high performance styles. Common engineered solutions are available such as torque overload protection, electrically insulated, spark resistant, and alloy construction. An optional one size larger LH hub, two sizes larger XL hub, or three sizes larger XXL hub is available with adapter to increase bore capacity. The XTSR52 couplings are an all-purpose high-speed, high-torque coupling used where minimum coupling weight is desirable. The XTSR52 couplings are API 610, ISO 10441, ISO 14691 compliant when specified, and ATEX II 2GD c T6 certified. Common applications include motor and turbine driven pumps, compressors, fans, synchronized rollers, wire feeders and blowers.

Construction

Hubs and Center assembly: Carbon steel
Bolts: Alloy steel
Disc Packs: Stainless steel. Max misalignment is 1° per disc pack for sizes 754 & 1004, 1/2° per disc pack for sizes 726-996, and 1/3° per disc pack for sizes 1088-5258.
Coatings Available: Manganese Phosphate provided as standard. Other coatings available upon request.

WITHOUT ADAPTER

WITH ADAPTER

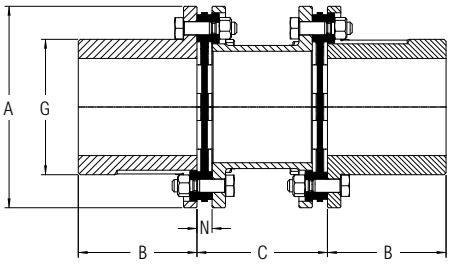

STANDARD HUB (WITHOUT ADAPTER)

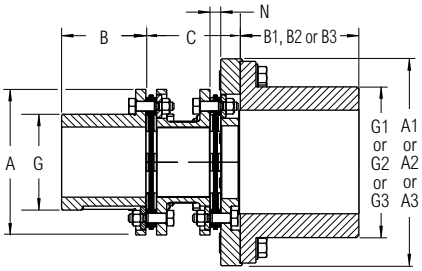

WITH ADAPTER AND LARGE HUB

General Coupling Data

Size	Max. Cont. Torque (N•m) ⑤	③ Std Hub Max. Bore	③ LH Hub Max. Bore	③ XL Hub Max. Bore	③ XXL Hub Max. Bore	Min. C (mm)	Min. C with Adapter (mm)	Max. C (mm)	Max. Speed (rpm)		① Axial Capacity (mm)	N (mm)	② WR² (kg•m²)
									④ Not Balanced	Balanced			
754	250	42	–	–	–	75	–	200	3,600	25,000	±4.0	6.30	0.00232
1004	300	50	–	–	–	75	–	200	3,600	22,000	±4.5	9.60	0.00948
726	297	45	–	55	65	82	95	373	12,000	20,000	±1.3	8.62	0.00192
826	554	50	52	65	76	88	103	373	10,900	18,500	±1.5	9.34	0.00449
996	927	60	61	76	95	98	117	779	9,800	15,000	±1.8	9.59	0.00955
1088	2,190	65	76	95	110	103	122	781	9,000	14,000	±1.3	10.36	0.0188
1298	3,550	80	90	110	125	116	139	781	8,000	12,000	±1.6	12.92	0.0444
1548	5,910	95	105	125	135	128	155	783	7,100	10,000	±1.8	14.79	0.0985
1698	8,190	105	125	135	150	152	184	788	6,600	9,100	±2.0	15.79	0.166
1928	11,100	120	135	150	155	160	193	792	6,100	8,500	±2.3	17.08	0.283
2068	15,400	130	150	155	185	176	215	1098	5,800	7,800	±2.5	18.42	0.430
2278	19,900	140	155	180	225	213	253	1101	5,500	7,100	±2.7	19.17	0.711
2468	26,200	150	166	220	250	222	265	1104	5,200	6,500	±3.0	20.49	1.04
2698	35,900	165	200	245	270	238	286	1105	4,800	6,000	±3.2	23.46	1.62
2888	47,000	175	220	260	280	270	322	1108	4,600	5,700	±3.5	25.18	2.51
3058	52,000	185	235	280	310	270	322	1114	4,400	5,400	±3.7	25.18	3.24
3358	70,200	215	260	300	330	302	361	1117	4,200	4,700	±4.0	27.34	5.19
3668	94,300	225	285	320	350	321	383	1117	3,900	4,400	±4.4	30.38	8.53
3908	103,000	240	310	350	400	321	384	1121	3,800	4,100	±4.7	30.38	11.0
4178	128,000	255	330	380	450	343	413	1128	3,600	3,900	±5.0	32.43	15.4
4588	189,000	280	360	430	460	498	578	1026	3,400	3,600	±5.5	35.95	26.6
4918	235,000	300	400	450	–	518	601	1030	3,200	3,300	±5.9	38.12	37.9
5258	283,000	320	430	–	–	540	630	1037	3,100	3,100	±6.3	40.29	52.4

Example Selection:

1. Select coupling size 1088 for 2000 Nm torque and 65mm pump shaft diameter.
2. Select XXL 2nd hub for 100mm motor shaft diameter.
3. Therefore, coupling is a 1088 XTSR52 XXL.

A 1088 XTSR52 XXL has one hub with 65mm max bore and one hub with 110mm max bore.

Size	Std A (mm)	LH A1 (mm)	XL A2 (mm)	XXL A3 (mm)	Std B (mm)	LH B1 (mm)	XL B2 (mm)	XXL B3 (mm)	Std G (mm)	LH G1 (mm)	XL G2 (mm)	XXL G3 (mm)	② Std Weight (kg)	Weight Change Per mm of "C" (kg/mm)
754	95	–	–	–	50	–	–	–	58.0	–	–	–	2.40	0.00318
1004	130	–	–	–	50	–	–	–	75.0	–	–	–	5.00	0.00631
726	95	–	108	129	30	–	42	51	63.8	–	73	86	1.77	0.00363
826	108	108	129	140	50	42	51	82	71.8	73	86	104	3.34	0.00562
996	129	129	140	166	50	51	82	95	84.4	86	104	123	4.78	0.00510
1088	140	140	166	199	81	82	95	114	92.1	104	123	145	8.34	0.00983
1298	166	166	199	220	97	95	114	122	110.6	123	145	165	13.6	0.0123
1548	197	199	220	245	97	114	122	135	132.4	145	165	182	20.8	0.0176
1698	218	220	245	264	110	122	135	155	146.9	165	182	200	29.0	0.0219
1928	245	245	264	291	110	135	155	167	167.7	182	200	220	38.2	0.0268
2068	264	264	291	313	125	155	167	190	178.6	200	220	236	49.9	0.0339
2278	291	291	313	345	145	167	190	185	196.7	220	236	280	69.7	0.0395
2468	313	313	345	381	150	190	185	200	213.5	236	280	308	87.3	0.0475
2698	343	345	381	405	150	185	200	191	232.1	280	308	332	111	0.0606
2888	371	381	405	437	175	200	191	225	246.0	308	332	355	150	0.0777
3058	395	405	437	482	185	191	225	257	263.0	332	355	398	172	0.0771
3358	427	437	482	503	245	225	257	249	288.1	355	398	419	232	0.0958
3668	466	482	503	529	281	257	249	266	315.2	398	419	444	329	0.117
3908	490	503	529	608	303	249	266	300	339.2	419	444	504	381	0.115
4178	524	529	608	648	322	266	300	320	361.1	444	504	545	468	0.134
4588	587	608	648	678	350	300	320	346	392.1	504	545	575	661	0.188

① All Thomas disc couplings meet NEMA frame sleeve bearing motor specifications without modification or the addition of end-float restricting devices.
② Weight and WR² of couplings without adapters at maximum bore and minimum "C" dimension listed.
③ Consult Rexnord for minimum rough bore sizes.
④ XTSR52 couplings meet AGMA Class 9 balance requirements as manufactured with interference fit bore and close fit keyway. If clearance fit and/or setscrews are required, consult Rexnord.
⑤ Peak Overload Torque (N • m) is twice the Maximum Continuous Torque.

NOTE: Dimensions subject to change. Certified dimensions of ordered material furnished on request.

Rexnord Thomas Flexible Disc Couplings

Thomas XTSR52 Spacer Type Series Coupling with Optional Adapter

Component Part Numbers

Size	① Standard Hub	⑥ LH Hub + Cap Screw Kit	⑥ XL Hub + Cap Screw Kit	⑥ XXL Hub + Cap Screw Kit	Adapters ⑤			Inch Standard C Dimensions						Metric Standard C Dimensions			
					LH Part No.	XL Part No.	XXL Part No.	3.5"	4.375"	5.0"	7.5"	8.0"	9.0"	100mm	140mm	180mm	250mm
								② Standard Center Member When Adapter Not Used									
754	10003200	–	–	–	–	–	–	10003201	–	10003202	–	–	–	10003203	–	–	–
1004	10003204	–	–	–	–	–	–	10003205	–	10003206	–	–	–	10003207	–	–	–
726	10001191	10001611	10001612	10001613	10000241	10001161	10002621	10000921	–	10000922	–	–	–	10000831	10000910	–	–
826	10001192	10001612	10001613	10001614	10000242	10001162	10002622	10000923	–	10000924	–	–	–	10000832	10000911	–	–
996	10001193	10001613	10001614	10001615	10000243	10001163	10002623	–	10000925	10000926	–	–	–	10000912	10000833	10000913	–
1088	10001194	10001614	10001615	10001616	10000244	10001164	10002624	–	10000927	10000928	–	–	–	–	10000834	10000914	–
1298	10001195	10001615	10001616	10001617	10000245	10001165	10002625	–	10000929	10000930	–	–	–	–	10000835	10000915	–
1548	10001196	10001616	10001617	10001618	10000246	10001166	10002626	–	–	10000931	10000932	10000933	–	–	10000916	10000836	10000917
1698	10001197	10001617	10001618	10001619	10000247	10001167	10002627	–	–	–	10000934	10000935	–	–	–	10000837	10000918
1928	10001198	10001618	10001619	10001620	10000248	10001168	10002628	–	–	–	10000936	10000937	10000938	–	–	10000838	10000919
2068	10001199	10001619	10001620	10001621	10000249	10001169	10002629	–	–	–	10000939	10000940	10000941	–	–	10000920	10000839
2278	10001200	10001620	10001621	10001622	10000250	10001170	10002630	–	–	–	–	10000942	10000943	–	–	–	10000840
2468	10001201	10001621	10001622	10001623	10000251	10001171	10002631	–	–	–	–	–	10000944	–	–	–	10000841
2698	10001202	10001622	10001623	10001624	10000252	10001172	10002632	–	–	–	–	–	10000945	–	–	–	10000842
2888	10001203	10001623	10001624	10001631	10000253	10001173	10002633	–	–	–	–	–	–	–	–	–	10000843
3058	10001204	10001624	10001631	10001625	10000254	10001174	10002634	–	–	–	–	–	–	–	–	–	10000844
3358	10001205	10001631	10001625	10001626	10000255	10001175	10002635	–	–	–	–	–	–	–	–	–	10000845
3668	10001206	10001625	10001626	10001627	10000256	10001176	10002636	–	–	–	–	–	–	–	–	–	–
3908	10001207	10001626	10001627	10001628	10000257	10001177	10002637	–	–	–	–	–	–	–	–	–	–
4178	10001208	10001627	10001628	10001629	10000258	10001178	10002638	–	–	–	–	–	–	–	–	–	–
4588	10001209	10001628	10001629	10001630	10000259	10001179	10002639	–	–	–	–	–	–	–	–	–	–
4918	10001210	10001629	10001630	–	10000260	10001180	–	–	–	–	–	–	–	–	–	–	–
5258	10001211	10001630	–	–	10000261	–	–	–	–	–	–	–	–	–	–	–	–

Size	Inch Standard C Dimensions When Adapter Used					Metric Standard C Dimensions				③ Disc Pack Hardware Kit	④ Disc Pack	⑦ Adapter-Hub Capscrew Kit
	4.375"	5.0"	7.5"	8.0"	9.0"	100mm	140mm	180mm	250mm			
	② Standard Center Member When Adapter Used (LH, XL, XXL)											
754	–	–	–	–	–	–	–	–	–	10003208	10003209	–
1004	–	–	–	–	–	–	–	–	–	10003210	10003211	–
726	–	10447053	–	–	–	10399144	10447054	–	–	10001561	10000091	10001591
826	10447077	10447078	–	–	–	–	10397202	–	–	10001562	10000092	10001591
996	–	10447082	–	–	–	–	10399148	10397204	–	10001563	10000093	10001592
1088	–	10404466	–	–	–	–	10399150	10397205	–	10001564	10000094	10001593
1298	–	–	–	–	–	–	10447083	10397206	–	10001565	10000095	10001594
1548	–	–	10447085	10447086	–	–	–	10399155	10447084	10001566	10000096	10001595
1698	–	–	10447087	10447088	–	–	–	–	10397207	10001567	10000097	10001596
1928	–	–	–	10447089	10447090	–	–	–	10397208	10001568	10000098	10001597
2068	–	–	–	–	10447043	–	–	–	10397211	10001569	10000099	10001598
2278	–	–	–	–	–	–	–	–	–	10001570	10000100	10001599
2468	–	–	–	–	–	–	–	–	–	10001571	10000101	10001600
2698	–	–	–	–	–	–	–	–	–	10001572	10000102	10001601
2888	–	–	–	–	–	–	–	–	–	10001573	10000103	10001602
3058	–	–	–	–	–	–	–	–	–	10001574	10000104	10001602
3358	–	–	–	–	–	–	–	–	–	10001575	10000105	10001603
3668	–	–	–	–	–	–	–	–	–	10001576	10000106	10001604
3908	–	–	–	–	–	–	–	–	–	10001577	10000107	10001605
4178	–	–	–	–	–	–	–	–	–	10001578	10000108	10001605
4588	–	–	–	–	–	–	–	–	–	10001579	10000109	10001606
4918	–	–	–	–	–	–	–	–	–	10001580	10000110	10001607
5258	–	–	–	–	–	–	–	–	–	10001581	10000111	10001608

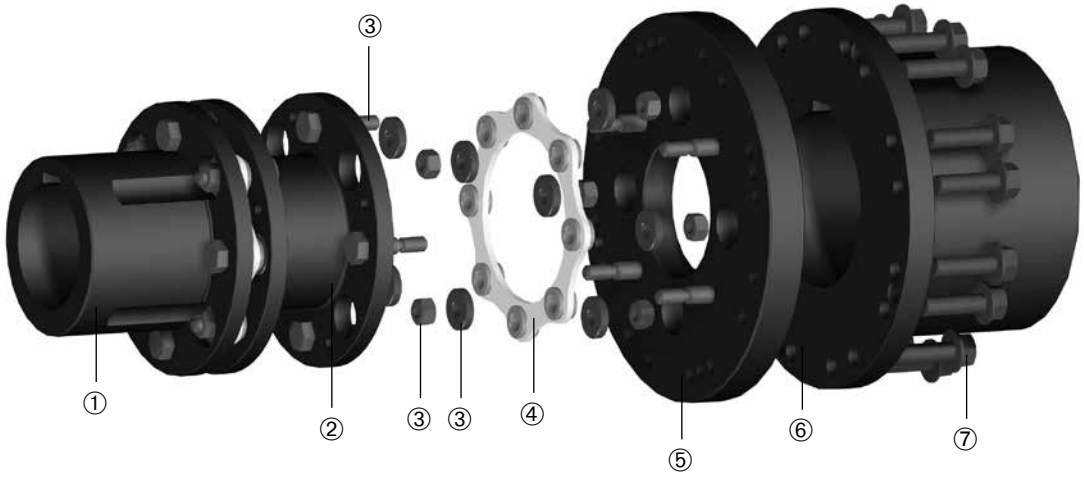

NOTE: Dimensions subject to change. Certified dimensions of ordered material furnished on request.

Rexnord Thomas Flexible Disc Couplings

Thomas XTSR71 Spacer Type Series Coupling with Adapter

The optimized 3-piece design allows for the smallest possible package for an application. The hubs are pilot fitted to the factory assembled center member. The design allows for repeatable installations without special tooling. Additional modifications may be made to reduce coupling weight, or special mountings to make it an economical option on various critical and high speed applications. Common engineered solutions are available such as torque overload protection, electrically insulated, spark resistant and alloy construction.

The XTSR71 couplings are designed for spacer type coupling critical applications including API applications. The XTSR71 couplings are API 610, ISO 10441, ISO 14691 compliant when specified, and ATEX II 2GD c T6 certified. Common applications include motor and turbine driven pumps, compressors, fans, synchronized rollers, wire feeders and blowers.

Construction

Hubs and Center assembly: Carbon steel
Bolts: Alloy steel
Disc Packs: Stainless steel. Max misalignment is 1/2° per disc pack for sizes 726 to 996 and 1/3° per disc pack for sizes 1088 to 5258.
Coatings Available: Manganese Phosphate provided as standard. Other coatings available upon request.

General Coupling Data

Size	Max. Cont. Torque (N•m) ⑤	③ Std Hub Max. Bore	③ XL Hub Max. Bore	③ XXL Hub Max. Bore	Min. C (mm)	Max. C (mm)	Max. Speed (rpm)		① Axial Capacity (mm)	Max Counter Bore E (mm)
							④ Not Balanced	Balanced		
726	297	42	55	65	65	398	12,000	20,000	±1.3	52
826	554	52	65	76	77	403	10,900	18,500	±1.5	65
996	927	61	76	95	92	817	9,800	15,000	±1.8	76
1088	2,190	76	95	110	96	818	9,000	14,000	±1.3	88
1298	3,550	90	110	125	115	827	8,000	12,000	±1.6	104
1548	5,910	105	125	135	135	837	7,100	10,000	±1.8	123
1698	8,190	125	135	150	151	850	6,600	9,100	±2.0	142
1928	11,100	135	150	155	161	857	6,100	8,500	±2.3	156
2068	15,400	150	155	185	187	1176	5,800	7,800	±2.5	170
2278	19,900	155	180	225	196	1182	5,500	7,100	±2.7	188
2468	26,200	166	220	250	209	1190	5,200	6,500	±3.0	199
2698	35,900	200	245	270	236	1202	4,800	6,000	±3.2	246
2888	47,000	220	260	280	255	1212	4,600	5,700	±3.5	271
3058	52,000	235	280	310	257	1219	4,400	5,400	±3.7	298
3358	70,200	260	300	330	287	1236	4,200	4,700	±4.0	314
3668	94,300	285	320	350	310	1243	3,900	4,400	±4.4	354
3908	103,000	310	350	400	311	1247	3,800	4,100	±4.7	377
4178	128,000	330	380	450	340	1268	3,600	3,900	±5.0	397
4588	189,000	360	430	460	386	1186	3,400	3,600	±5.5	450
4918	235,000	400	450	–	408	1198	3,200	3,300	±5.9	487
5258	283,000	430	–	–	438	1218	3,100	3,100	±6.3	512

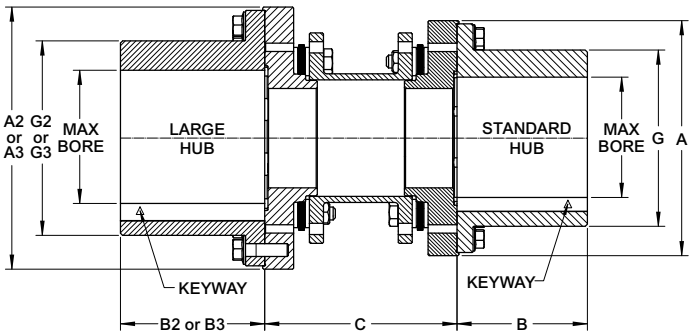

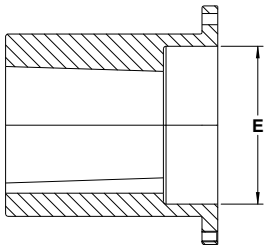

Size	Std A (mm)	XL A2 (mm)	XXL A3 (mm)	Std B (mm)	XL B2 (mm)	XXL B3 (mm)	Std G (mm)	XL G2 (mm)	XXL G3 (mm)	② Std Weight (kg)	Weight Change Per mm of "C" (kg/mm)	② WR^2 (kg•m²)
726	95	108	129	35	42	51	59.0	73	86	3.1	0.00311	0.00364
826	108	129	140	42	51	82	73.0	86	104	5.0	0.00535	0.00770
996	129	140	166	51	82	95	86.0	104	123	8.4	0.00503	0.01880
1088	140	166	199	82	95	114	104.0	123	145	12.5	0.00966	0.0336
1298	166	199	220	95	114	122	123.0	145	165	20.6	0.0118	0.0796
1548	199	220	245	114	122	135	145.0	165	182	34.6	0.0161	0.1890
1698	220	245	264	122	135	155	165.0	182	200	47.0	0.0214	0.318
1928	245	264	291	135	155	167	182.0	200	220	62.7	0.0251	0.533
2068	264	291	313	155	167	190	200.0	220	236	84.9	0.0325	0.840
2278	291	313	345	167	190	185	220.0	236	280	110	0.0378	1.300
2468	313	345	381	190	185	200	236.0	280	308	143	0.0451	1.94
2698	345	381	405	185	200	191	280.0	308	332	184	0.0572	3.30
2888	381	405	437	200	191	225	308.0	332	355	257	0.0716	5.35
3058	405	437	482	191	225	257	332.0	355	398	274	0.0723	6.80
3358	437	482	503	225	257	249	355.0	398	419	366	0.0907	10.40
3668	482	503	529	257	249	266	398.0	419	444	521	0.111	17.60
3908	503	529	608	249	266	300	419.0	444	504	536	0.111	20.9
4178	529	608	648	266	300	320	444.0	504	545	648	0.130	28.1
4588	608	648	678	300	320	346	504.0	545	575	993	0.179	54.2
4918	648	678	–	320	346	–	545.0	575	–	1200	0.210	76.0
5258	678	–	–	346	–	–	575.0	–	–	1420	0.235	99.9

Example Selection:

1. Select coupling size 1088 for 2000N·m torque and 65mm pump shaft diameter.
2. Select XXL 2nd hub for 100mm motor shaft diameter.
3. Therefore, coupling is a 1088 XTSR71 XXL.

A 1088 XTSR71 XXL has one hub with 76mm max bore and one hub with 110mm max bore.

① All Thomas disc couplings meet NEMA frame sleeve bearing motor specifications without modification or the addition of end-float restricting devices.
② Weight and WR^2 of couplings with standard adapters at maximum bore and minimum "C" dimension listed.
③ Consult Rexnord for minimum rough bore sizes.
④ XTSR71 couplings meet AGMA Class 9 balance requirements as manufactured with interference fit bore and close fit keyway. If clearance fit and/or setscrews are required, consult Rexnord.
⑤ Peak Overload Torque (N • m) is twice the Maximum Continuous Torque.

NOTE: Dimensions subject to change. Certified dimensions of ordered material furnished on request.

Rexnord Thomas Flexible Disc Couplings

Thomas XTSR71 Spacer Type Series Coupling with Adapters

Component Part Numbers

Size	① Standard Hub + Cap Screw Kit	XL Hub + Cap Screw Kit	② Standard Adapter	XL Adapter	XXL Adapter	Inch Standard C Dimensions							Metric Standard C Dimensions			
						3.5"	4.375"	5.0"	7.0"	7.5"	8.0"	9.0"	100mm	140mm	180mm	250mm
						③ Standard Center Member STD, XL, XXL										
726	10001611	10001612	10001131	10001781	10002805	10000871	10000872	10000873	–	–	–	–	10000801	10000860	–	–
826	10001612	10001613	10001132	10001782	10002806	10355817	10000875	10000876	–	–	–	–	10000802	10000861	–	–
996	10001613	10001614	10001133	10001783	10002807	–	10000877	10000878	10000879	–	–	–	10000862	10000803	10000863	–
1088	10001614	10001615	10001134	10001784	10002808	–	–	10000880	10000881	–	–	–	–	10000804	10000864	–
1298	10001615	10001616	10001135	10001785	10002809	–	–	10000882	10000883	–	–	–	–	10000805	10000865	–
1548	10001616	10001617	10001136	10001786	10002810	–	–	–	10000885	–	–	–	–	10000866	10000806	10000867
1698	10001617	10001618	10001137	10001787	10002811	–	–	–	10000886	–	–	–	–	–	10000807	10000868
1928	10001618	10001619	10001138	10001788	10002812	–	–	–	10000887	10000888	10000889	–	–	–	10000808	10000869
2068	10001619	10001620	10001139	10001789	10002813	–	–	–	–	–	10000891	–	–	–	–	10000809
2278	10001620	10001621	10001140	10001790	10002814	–	–	–	–	–	10000892	–	–	–	–	10000810
2468	10001621	10001622	10001141	10001791	10002815	–	–	–	–	–	–	10000893	–	–	–	10000811
2698	10001622	10001623	10001142	10001792	10002816	–	–	–	–	–	–	–	–	–	–	10000812
2888	10001623	10001624	10001143	10001793	10002817	–	–	–	–	–	–	–	–	–	–	–
3058	10001624	10001631	10001144	10001794	10002818	–	–	–	–	–	–	–	–	–	–	–
3358	10001631	10001625	10001145	10001795	10002819	–	–	–	–	–	–	–	–	–	–	–
3668	10001625	10001626	10001146	10001796	10002820	–	–	–	–	–	–	–	–	–	–	–
3908	10001626	10001627	10001147	10001797	10002821	–	–	–	–	–	–	–	–	–	–	–
4178	10001627	10001628	10001148	10001798	10002822	–	–	–	–	–	–	–	–	–	–	–
4588	10001628	10001629	10001149	10001799	10002823	–	–	–	–	–	–	–	–	–	–	–
4918	10001629	10001630	10001150	10001800	–	–	–	–	–	–	–	–	–	–	–	–
5258	10001630	–	10001151	–	–	–	–	–	–	–	–	–	–	–	–	–

Size	④ Adapter Hub Capscrew Kit	⑤ Disc Pack Hardware Kit	⑥ Disc Pack
726	10001591	10001561	10000091
826	10001591	10001562	10000092
996	10001592	10001563	10000093
1088	10001593	10001564	10000094
1298	10001594	10001565	10000095
1548	10001595	10001566	10000096
1698	10001596	10001567	10000097
1928	10001597	10001568	10000098
2068	10001598	10001569	10000099
2278	10001599	10001570	10000100
2468	10001600	10001571	10000101
2698	10001601	10001572	10000102
2888	10001602	10001573	10000103
3058	10001602	10001574	10000104
3358	10001603	10001575	10000105
3668	10001604	10001576	10000106
3908	10001605	10001577	10000107
4178	10001605	10001578	10000108
4588	10001606	10001579	10000109
4918	10001607	10001580	10000110
5258	10001608	10001581	10000111

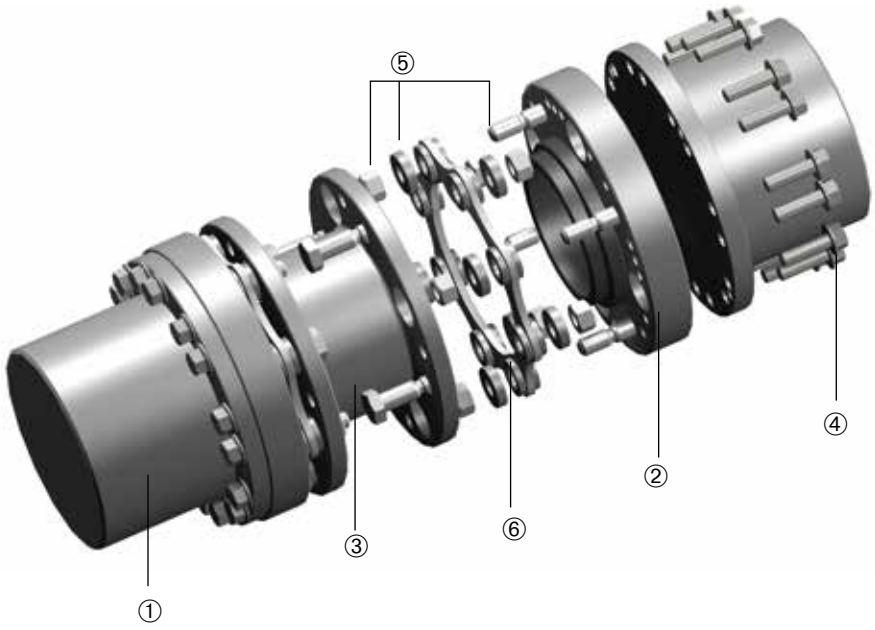

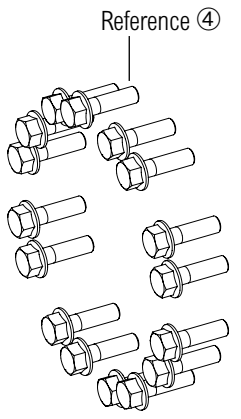

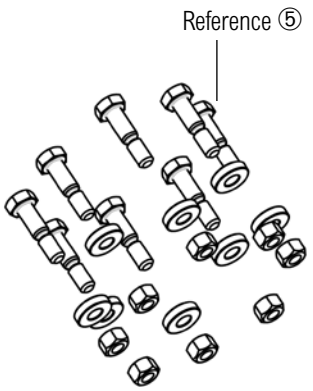

NOTE: Dimensions subject to change. Certified dimensions of ordered material furnished on request.

Rexnord Thomas Flexible Disc Couplings

Tollok TLK 603 External Shrink Disc Standard Version

Characteristics

Medium-high torque
No shaft-hub axial movement
Limited installation time
Quick dismantling

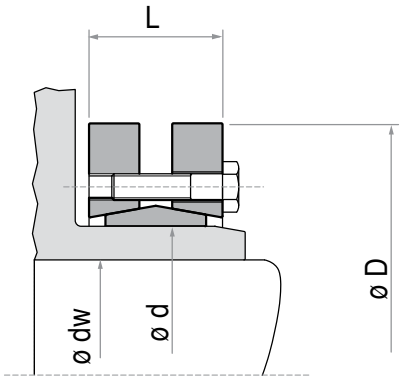

TLK 603 shown mounted on separately sold XTSR71 coupling.

TLK 603

Tollok TLK 603 Ød (mm)	Shaft O.D. Ødw		Max. Continous Torque (N·m)		Tollok Data			XTSR71 Coupling Size										
	Min (mm)	Max (mm)	at Min dw	at Max dw	ØD (mm)	L (mm)	Weight (kg)	726	826	996	1088	1298	1548	1698	1928	2068	2278	2468	2698
30	24	26	300	380	60	21.5	0.3												
36	28	31	440	630	72	23.5	0.4												
44	32	36	620	860	80	25.5	0.6												
50	38	42	940	1,380	90	27.5	0.8												
55	42	48	1,160	1,880	100	30.5	1.1												
62	48	52	1,850	2,400	110	30.5	1.3												
68	50	60	2,000	3,150	115	30.5	1.4												
75	55	65	2,500	3,950	138	32.5	1.7												
80	60	70	3,200	4,600	145	32.5	1.9												
85	65	75	4,800	7,400	155	39.0	3.5												
90	65	75	4,750	7,250	155	39.0	3.3												
100	70	80	6,900	9,000	170	44.0	4.7												
110	75	85	7,200	10,800	185	50.0	5.9												
115	80	90	7,400	11,100	188	50.0	5.5												
120	80	90	10,600	14,500	215	54.0	9.0												
125	85	95	11,000	15,000	215	54.0	8.3												
130	90	100	11,300	15,400	215	54.0	8.0												
140	95	105	15,100	20,100	230	60.5	10.0												
155	105	115	22,000	28,000	265	64.5	15.0												
160	110	120	22,600	28,800	265	64.5	14.5												
140	115	125	31,000	39,000	290	71.0	22.0												
155	120	130	31,900	40,100	290	71.0	21.0												
175	125	135	36,000	45,000	300	71.0	22.0												
140	130	140	37,000	46,300	300	71.0	21.0												
155	135	145	52,000	62,000	330	86.0	37.0												
190	140	150	53,500	63,800	330	86.0	36.0												
140	140	155	65,000	81,500	350	86.0	41.0												
155	150	160	74,000	86,000	350	86.0	41.0												
220	160	170	95,000	110,000	370	104.0	54.0												
240	170	190	120,000	156,000	405	109.0	67.0												

Available In These Sizes

Identified selections meet minimum bore, maximum bore and are equal to or greater than coupling size peak overload torque rating.

NOTE: Dimensions subject to change. Certified dimensions of ordered material furnished on request.

Notes

Rexnord Thomas Flexible Disc Couplings

Type AMR

AMR couplings are used in heavy-duty, slow to medium speed applications, where high-starting torque, shock loads, torque reversals or continuous alternating torque are present. The open lug type center member provides ample clearance for assembly while minimizing the space required for coupling installation.

Construction

Hubs: Sizes 162 - 550 are carbon steel with integral washer, sizes 600 and larger are carbon steel with separate grooved washer.
Center Member: Sizes 162 - 750 are cast alloy iron, sizes 800 and larger are cast steel
Bolts: Alloy steel
Disc Packs: Tomaloy Tpack (sizes 225 - 750)
Coatings Available: Consult Rexnord
Other disc pack materials such as stainless steel, Monel and Inconel are available; please consult Rexnord.
Misalignment: 1/3° per disc pack

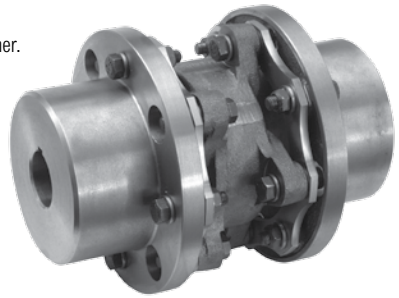

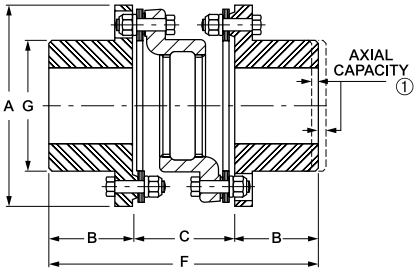

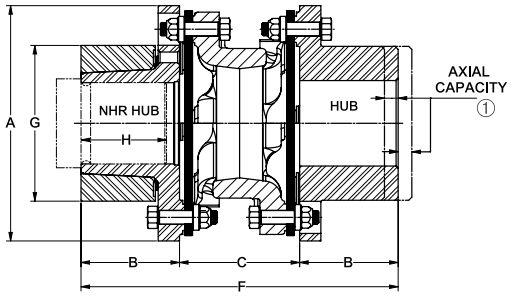

General Dimensions (mm)

Coupling Size	④ Rough Bore	⑥ Max. Bore (mm)	A	B	C	F	G
162	–	50	116	44	67	155	70
200	–	58	146	54	76	184	92
225	–	70	152	64	76	204	99
262	–	84	175	73	89	235	114
312	–	97	206	86	105	277	138
350	–	110	232	95	116	306	152
375	–	120	256	102	132	336	165
425	–	130	279	108	141	357	178
450	–	140	302	114	151	379	189
500	68	146	341	127	173	427	213
550	68	166	381	140	196	476	240
600	94	176	425	152	215	519	262
700	108	205	481	178	245	601	298
750	125	224	524	184	268	636	321
800	132	241	568	197	289	683	349
850	138	250	603	210	309	729	368
925	151	267	654	229	337	795	403
1000	165	290	718	241	369	851	445
1100	178	314	768	260	394	914	470
1200	191	339	848	279	433	991	514
1300	203	376	914	305	465	1075	572
1550	216	394	997	368	494	1230	660

Coupling Size	Max. Kilowatt per 100 RPM Service Factor 1.0	③ Max. RPM	Max. Continuous Torque (Nm)	⑦ Peak Overload Torque (Nm)	② Weight (kg)	② ⑤ WR^2 ($kg\text{-}m^2$)	① Axial Capacity (mm)
162	6.8	2,500	648	778	3.6	0.005	±0.91
200	13	2,500	1,245	1,494	7.3	0.017	±0.91
225	18.4	2,500	1,758	2,110	9.1	0.022	±0.91
262	24.9	2,500	2,375	2,850	14.5	0.047	±1.09
312	28	2,500	2,670	3,204	21.3	0.107	±1.29
350	62.4	2,300	5,961	7,153	32.2	0.193	±1.42
375	93.9	2,200	8,968	10,762	41.8	0.300	±1.57
425	104	2,000	9,935	11,921	53.1	0.465	±1.70
450	161	1,900	15,367	18,441	65.4	0.658	±1.82
500	237	1,800	22,663	27,196	96.2	1.241	±2.02
550	325	1,800	31,052	37,262	131.7	2.113	±2.33
600	424	1,800	40,514	48,617	176.6	3.511	±2.59
700	540	1,500	51,535	61,842	266.5	6.671	±2.92
750	763	1,500	72,808	87,369	327.8	9.919	±3.17
800	962	1,200	91,869	110,243	425.9	16.27	±3.45
850	1063	1,100	101,456	121,748	522.1	22.12	±3.65
925	1515	1,000	144,647	173,576	635.6	29.85	±3.96
1000	1758	900	167,893	201,472	863	50.33	±4,36
1100	2419	800	230,978	277,173	1,035	71.69	±4,64
1200	2604	650	248,611	298,334	1,357	115.3	±5,15
1300	2822	600	269,474	323,369	1,771	164.1	±5,53
1550	3693	600	352,676	423,211	2,338	260.1	±6,14

① All Thomas disc couplings meet NEMA frame sleeve bearing motor specifications without modification or the addition of end-float restricting devices.
② Weight and WR^2 at maximum bore.
③ Consult Rexnord if balancing is required.
④ Consult Rexnord for minimum rough bore on size 162-450.
⑤ Special hub available for size 600 with 6 ¾ max. bore. Consult Rexnord.
⑥ Straight bores with no keyway require a special material hub. Consult Rexnord.
⑦ The peak overload torque is not an alternating torque limit.

NOTE: Dimensions subject to change. Certified dimensions of ordered material furnished on request.

Rexnord Thomas Flexible Disc Couplings

Flywheel Adapter Type CMR

CMR couplings are used in heavy-duty, slow to medium speed applications, where high-starting torque, shock loads, torque reversals or continuous alternating torque are present. The open lug type center member provides ample clearance for assembly while minimizing the space required for coupling installation.

The CMR couplings are designed with a flywheel adapter plate which bolts directly to the flywheel of an engine or compressor. The adapters are made to fit accurately into the recess in the flywheel, and external strains on the crankshaft resulting from the misalignment of the driven equipment is minimized.

Construction

Hubs: Sizes 162 - 550 are carbon steel with integral washer, sizes 600 and larger are carbon steel with separate grooved washer.
Center Section: Sizes 162-750 are cast alloy iron, Sizes 800 and above are cast steel
Bolts: Alloy steel
Disc Packs: Tomaloy Tpack (225-750 size)
Coatings: Consult Rexnord
Other disc pack materials such as stainless steel, Monel and Inconel are available; please consult Rexnord.
Misalignment: 1/3° per disc pack

Flywheel Adapter Information

Adapters can be furnished to accommodate virtually any flange design. Where possible, the user should select dimensions from the tables below, as these represent industry standards and thus are the most economical selection. Note that most sizes are available either with SAE bolting or Thomas heavy-duty bolting.

Available Adapters

Coupling Size	Adapters Available in Shaded Sizes (mm)										
Adapter Tolerance	215.900 215.849	241.300 241.249	263.525 263.474	314.325 314.274	352.425 352.374	406.400 406.349	466.725 466.674	517.525 517.449	571.500 571.424	673.100 673.024	733.425 733.349
162											
200											
225											
262											
312											
350											
375											
425											
450											
500											
550											
600											
700											
750											
800											
850											

Available In These Sizes

Sizes 925 to 1550 - Adapting dimensions available upon request.
NOTE: values are metric conversions of standard SAE Inch adapter diameters.

Bolting

Standard A Diameter (mm)	Light-Duty SAE Bolting			Heavy-Duty Thomas Bolting		
	Bolt Circle	No. Holes	Hole Dia.	Bolt Circle	No. Holes	Hole Dia.
215.90	200.2	6	8.6	190.5	8	10.4
241.30	222.3	8	8.6	219.0	8	11.9
263.65	244.4	6	10.4	241.3	8	11.9
314.45	295.2	8	10.4	292.1	8	13.5
352.55	333.3	8	10.4	317.5	8	16.8
406.40	–	–	–	365.3	8	19.8
466.85	438.2	8	13.5	425.5	8	19.8
517.65	489.0	8	13.5	469.9	8	23.1
571.50	543.1	6	16.8	520.7	8	26.2
673.10	641.4	12	16.8	622.3	12	26.2
733.55	692.2	12	19.8	682.8	12	26.2

NOTE: values are metric conversions of standard SAE Inch series diameters, bolt circle diameters and bolt holes.

NOTE: Dimensions subject to change. Certified dimensions of ordered material furnished on request.

Rexnord Thomas Flexible Disc Couplings

Flywheel Adapter Type CMR

General Dimensions (mm)

Coupling Size	⑦ Rough Bore	② Max. Bore (mm)	Min. "A" Dia.	B	C	D	E	F	G
162	–	50	158,8	44	84	116	7,9	128	70
200	–	58	187,5	54	99	146	9,7	153	92
225	–	70	193,5	64	99	152	9,7	163	99
262	–	84	215,9	73	113	175	11,2	186	114
312	–	97	241,3	86	135	206	12,7	221	138
350	–	110	276,4	95	149	232	12,7	244	152
375	–	120	301,8	102	168	256	14,2	270	165
425	–	130	333,2	108	181	279	15,7	289	178
450	–	140	374,7	114	194	302	17,5	308	189
500	68	146	406,4	127	222	341	19,1	349	213
550	68	166	457,2	140	251	381	22,4	391	240
600	94	176	466,9	152	276	425	25,4	428	262
700	108	205	517,7	178	316	481	25,4	494	298
750	125	224	609,6	184	343	524	28,4	527	321
800	132	241	650,7	197	375	568	31,8	572	349
850	138	250	685,5	210	400	603	31,8	610	368
925	151	267	733,6	229	438	654	35,1	667	403
1000	165	290	803,1	241	471	718	41,1	712	445
1100	178	314	847,9	260	503	769	44,5	763	470
1200	191	339	952,5	279	548	861	50,8	827	514
1300	203	376	1013	305	592	914	53,8	897	562
1550	216	394	1107,9	368	603	997	53,8	971	660

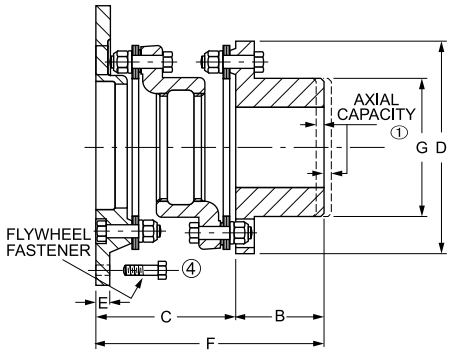

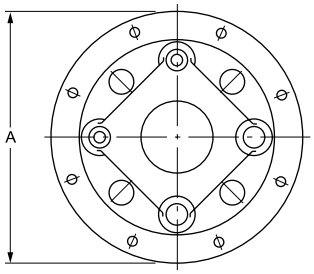

Coupling Size	Max. Kilowatt per 100 RPM — Service Factor 1.0	③ Max. RPM	Max. Continuous Torque (Nm)	⑧ Peak Overload Torque (Nm)	⑤ ⑥ Weight (kg)	⑤ WR^2 ($kg\text{-}m^2$)	① Axial Capacity
162	6.8	2,500	648	778	3.6	0,005	±0.91
200	13	2,500	1,245	1,494	7.3	0,017	±0.91
225	18	2,500	1,758	2,110	9.1	0,022	±0.91
262	25	2,500	2,375	2,850	14.5	0,047	±1.09
312	28	2,500	2,670	3,204	21.3	0,107	±1.29
350	62	2,300	5,961	7,153	32.2	0,193	±1.42
375	94	2,200	8,968	10,762	41.8	0,300	±1.57
425	104	2,200	9,935	11,921	53.1	0,465	±1.70
450	161	1,900	15,367	18,441	65.4	0,658	±1.82
500	237	1,800	22,663	27,196	96.2	1,241	±2.02
550	325	1,800	31,052	37,262	131.7	2,113	±2.33
600	424	1,800	40,514	48,617	176.6	3,511	±2.59
700	540	1,500	51,535	61,842	266.5	6,671	±2.92
750	763	1,500	72,808	87,369	327.8	9,919	±3.17
800	962	1,200	91,869	110,243	425.9	16,269	±3.45
850	1063	1,100	101,456	121,748	522.1	22,121	±3.65
925	1515	1,000	144,647	173,576	635.6	29,845	±3.96
1000	1758	900	167,893	201,472	749.1	45,645	±4,36
1100	2419	800	230,978	277,173	885.3	72,272	±4,64
1200	2604	650	248,611	298,334	1157.7	119,088	±5,15
1300	2822	600	269,474	323,369	1507.3	165,904	±5,53
1550	3693	600	352,676	423,211	1861.4	245,784	±6,14

① All Thomas disc couplings meet NEMA frame sleeve bearing motor specifications without modification or the addition of end-float restricting devices.
② Straight bores with no keyway require special material.
③ Maximum speeds are based on smallest available adapter O.D. For higher speeds, consult Rexnord.
④ Flywheel bolts are not supplied with coupling.
⑤ Weight and WR^2 at maximum bores and minimum adapter diameter.
⑥ Special hub available for size 600 with 6.75 in. max. bore. Consult Rexnord.
⑦ Consult Rexnord for minimum rough bore on sizes 162-450.
⑧ The peak overload torque is not an alternating torque limit.

NOTE: Dimensions subject to change. Certified dimensions of ordered material furnished on request.

Rexnord Thomas Flexible Disc Couplings

Type BMR

Type BMR couplings are recommended for heavy-duty motor and engine driven service such as paper machines, grinding mills, dredges, and marine propulsion. The BMR uses a solid intermediate shaft which can be furnished complete by Rexnord or fabricated by the user. Hubs are carbon steel, shafting is hot or cold-rolled steel, and disc packs are Tomaloy Tpack (225-750 sizes, stainless steel also available). Misalignment: 1/3° per disc pack.

General Dimensions (mm)

Coupling Size	③ Rough Bore	② ④ Max. Bore (mm)	A	B	C	F	G
162	–	50	116	44	10	128	70
200	–	58	146	54	11	153	92
225	–	70	152	64	11	163	99
262	–	84	175	73	13	186	114
312	–	97	206	86	16	221	138
350	–	110	232	95	17	244	152
375	–	120	256	102	21	270	165
425	–	130	279	108	22	289	178
450	–	140	302	114	22	308	189
500	68	146	341	127	27	349	213
550	68	166	381	140	32	391	240
600	94	176	425	152	35	428	262
700	108	205	481	178	40	494	298
750	125	224	524	184	44	527	321
800	132	241	568	197	46	572	349
850	138	250	603	210	51	610	368
925	151	267	654	229	57	667	403
1000	165	290	718	241	62	712	445
1100	178	314	768	260	64	763	470
1200	191	339	848	279	70	827	514
1300	203	376	914	305	72	897	562
1550	216	394	997	368	77	971	660

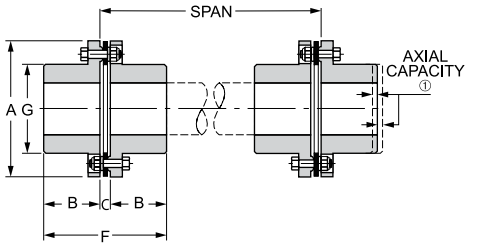

Coupling Size	Max. Kilowatt per 100 RPM — Service Factor 1.0	Max. RPM	Max. Continuous Torque (Nm)	Peak Overload Torque (Nm)	② Weight (kg)	② WR^2 ($kg\text{-}m^2$)	① Axial Capacity (mm)
162	6.8	1,800	648	778	5.9	29	±0,91
200	13	1,800	1,245	1,494	11.4	81	±0,91
225	18	1,800	1,758	2,110	13.2	105	±0,91
262	25	1,800	2,375	2,850	19.5	214	±1,09
312	28	1,800	2,670	3,204	35.9	566	±1,29
350	62	1,800	5,961	7,153	48.1	934	±1,42
375	94	1,800	8,968	10,762	63.1	1,470	±1,57
425	104	1,800	9,935	11,921	79.0	2,320	±1,70
450	161	1,500	15,367	18,441	96.7	3,085	±1.82
500	237	1,500	22,663	27,196	132.6	5,500	±2.0
550	325	1,500	31,052	37,262	190.7	9,850	±2.33
600	424	1,200	40,514	48,617	249.7	15,700	±2.59

BMR Shafting Selection Table

Coupling Size	Shaft Diameter (mm)	Max. Kw/100 for Given Shaft Dia.	Max. Allowable Shaft Wt. (kg)	Max. Span (mm) at Max. Allow Shaft Wt.	Max. Span (mm) For Various RPM			
					1800	1200	900	720
162	41	5.0	27	2591	1372	1676	1930	2159
200	51	9.9	34	2108	1524	1854	2108	2108
225	57	13.9	39	1930	1626	1930	1930	1930
262	64	17.7	81	3251	1702	2083	2413	2692
312	73	25	106	3226	1829	2235	2591	2896
350	89	56	132	2718	2007	2464	2718	2718
375	95	73	187	3353	2083	2540	2946	3302
425	108	93	228	3175	2210	2718	3124	3175
450	114	115	271	3353	2286	2794	3226	3353
500	127	169	365	3683	2413	2946	3404	3683
550	140	219	466	3886	2515	3099	3556	3886
600	152	302	588	4115	2642	3226	3734	4115

① All Thomas disc couplings meet NEMA frame sleeve bearing motor specifications without modifications or the addition of end-float restricting devices.
② Weight and WR^2 at maximum bore and minimum "L".
③ Consult Rexnord for minimum rough bore on sizes 162-450.
④ Straight bores with no keyway require special material.

NOTE: Dimensions subject to change. Certified dimensions of ordered material furnished on request.

Rexnord Thomas Flexible Disc Couplings

Series 44 Flywheel Adapter Type

The Series 44 is an all-steel fully machined flywheel adapter style coupling. It is used in heavy-duty applications where high starting torque, shock loads, torque reversals or alternating torques are present. This coupling is similar to the type CMR, but with the following benefits:

Dimension "C" and spool are adjustable to meet specific spacing requirements and/or to make adjustment to torsional characteristics.
The all-steel design provides a higher maximum continuous and peak overload torque rating.
Fully-machined components offer a higher operating speed and balancing level.

Construction

Hubs and Center Assembly: Carbon Steel
Bolts: Alloy Steel
Disc Packs: Tomaloy Tpack (225-750 Size)
Coatings Available: Black Oxide, Zinc, Cadmium
Other disc pack materials such as stainless steel, Monel and Inconel are available; please consult Rexnord.
Misalignment: 1/3° per disc pack

When specified, Series 44 couplings meet all requirements of API 610 or API 671.
If application requires API specification, please consult Rexnord.

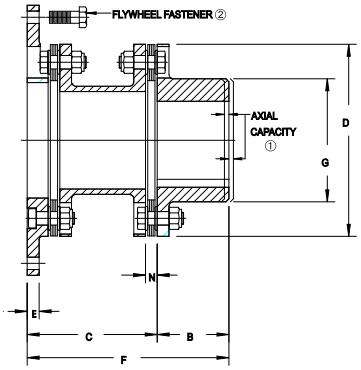

General Dimensions (mm)

Coupling Size	Max. Bore	Min. "A" Dia.	B	Std. C	Min. C	D	E	F (Ref.)	G	N
350	110	276	95	149	131	221	13	245	149	14
375	120	302	102	168	145	246	14	270	165	15
425	130	333	108	181	156	267	16	289	178	16
450	140	375	114	194	170	287	18	308	189	18
500	146	406	127	222	191	327	19	349	213	20
550	166	457	140	251	217	367	22	391	240	23
600	176	467	152	276	238	406	25	429	260	25
700	205	518	178	316	271	464	25	494	298	30
750	224	610	191	343	294	503	28	533	321	32
800	241	651	210	375	322	546	32	584	346	34
850	250	695	222	400	345	584	32	622	368	36
925	267	734	241	438	370	635	35	679	400	38
1000	290	803	267	471	430	699	41	738	438	43

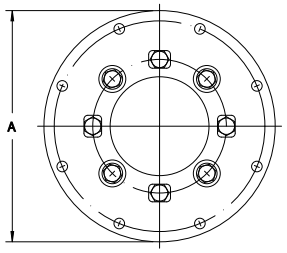

Coupling Size	Max. Kilowatt Per 100	③ Max. RPM		Max. Continuous Torque (Nm)	④ Peak Overload Torque (Nm)	⑤ Weight (kg)	Weight Change Per mm of "C" (kg)	⑤ WR^2 ($kg\text{-}m^2$)	WR^2 Change Per mm of "C" ($kg\text{-}m^2$)	① Axial Capacity (mm)
	Service Factor 1.0	Not Balanced	Balanced							
350	68.7	3,200	10,500	6,562	13,124	23	0.38	0.17	0.0553	±1.42
375	100.6	3,000	9,400	9,604	19,208	32	0.47	0.29	0.0829	±1.57
425	111.8	2,800	8,700	10,677	21,354	42	0.64	0.46	0.135	±1.70
450	161.0	2,700	8,100	15,380	30,760	54	0.67	0.72	0.156	±1.82
500	237.5	2,500	7,100	22,682	45,364	80	1.04	1.27	0.313	±2.02
550	368.4	2,300	6,300	35,187	70,374	118	1.31	2.37	0.495	±2.33
600	465.3	2,150	5,700	44,440	88,880	148	1.52	3.46	0.705	±2.59
700	591.4	1,950	500	56,478	112,956	222	2.21	6.56	1.19	±2.92
750	773.4	1,850	4,600	73,861	147,722	291	2.44	10.68	1.65	±3.17
800	1034.0	1,750	4,300	98,749	197,498	365	2.52	15.85	2.30	±3.45
850	1329.0	1,600	3,900	126,924	253,848	443	3.03	21.78	2.30	±3.65
925	1827.1	1,500	3,600	174,494	348,988	585	3.85	33.29	4.61	±3.96
1000	2097.7	1,500	3,250	200,345	400,690	751	3.88	50.87	5.83	±4.36

① Thomas disc couplings meet NEMA MG1-14.37, 1-20.81, & 1-21.81 specifications without the addition of end-float restricting devices.
② Flywheel fasteners are not supplied with this coupling. Contact equipment manufacturer for this hardware and tightening instructions.
③ Maximum speeds are based on use with all standard available adapters. For larger sizes or higher speeds, please consult Rexnord.
④ The peak overload torque rating is an infrequent torque overload limit and not an alternating or vibratory torque limit.
⑤ Weight and WR^2 values are based on maximum bores and minimum adapter diameters listed above.

NOTE: Dimensions subject to change. Certified dimensions of ordered material furnished on request.

Rexnord Thomas Flexible Disc Couplings

Series 44 Flywheel Adapter Type

Flywheel to Adapter Bolt Patterns

Standard A Diameter (mm)	Light-Duty SAE Bolting			Heavy-Duty Thomas Bolting		
	Bolt Circle	No. Holes	Hole Dia.	Bolt Circle	No. Holes	Hole Dia.
314.5	295.2	8	10.4	292.1	8	13.5
352.6	333.3	8	10.4	317.5	8	16.8
406.4	N/A	N/A	N/A	365.3	8	19.8
466.9	438.2	8	13.5	425.5	8	19.8
517.7	489.0	8	13.5	469.9	8	23.1
571.5	543.1	6	16.8	520.7	8	26.2
673.1	641.4	12	16.8	622.3	12	26.2
733.6	692.2	12	19.8	682.8	12	26.2

All dimensions listed are in millimeters and bolt holes are equally spaced.

NOTE: values are metric conversions of standard SAE inch series diameters, bolt circle diameters and bolt holes.

Flywheel Adapter Information*

Adapters can be furnished to accommodate most flange designs. Where possible, the user should select dimensions from the tables shown, as these represent industry standards that are more economical and readily available. Note that most sizes can be supplied with either SAE light-duty bolting or Thomas heavy-duty bolting. Please contact Rexnord for custom designs.

Coupling Size	Minimum Adapter "A" Dia.	① Standard Available Adapter Diameters (mm) - Actual OD Tolerance as Listed							
		314.3	352.4	406.4	466.7	517.5	571.5	673.1	733.4
		314.3	352.4	406.3	466.7	517.4	571.4	673.0	733.3
350	276.4	WT. = 1.76 WR^2 = 0.094	Wt. = 3.75 WR^2 = 0.210	Wt. = 6.95 WR^2 = 0.407	Wt. = 11.08 WR^2 = 0.644	Wt. = 14.98 WR^2 = 0.985	Wt. = 19.57 WR^2 = 0.985		
375	301.8	Wt. = 0.69 WR^2 = 0.016	Wt. = 2.91 WR^2 = 0.078	Wt. = 6.49 WR^2 = 0.208	Wt. = 11.12 WR^2 = 0.429	Wt. = 15.48 WR^2 = 0.694	Wt. = 20.66 WR^2 = 1.077		
425	333.3		Wt. = 1.27 WR^2 = 0.037	Wt. = 5.22 WR^2 = 0.180	Wt. = 10.35 WR^2 = 0.425	Wt. = 15.21 WR^2 = 0.720	Wt. = 20.88 WR^2 = 1.141		
450	374.7			Wt. = 2.67 WR^2 = 0.102	Wt. = 8.35 WR^2 = 0.374	Wt. = 13.76 WR^2 = 0.701	Wt. = 20.11 WR^2 = 1.173	Wt. = 33.73 WR^2 = 2.500	
500	406.4			Wt. = 0 ① WR^2 = 0	Wt. = 6.17 WR^2 = 0.295	Wt. = 12.03 WR^2 = 0.650	Wt. = 18.93 WR^2 = 1.162	Wt. = 33.78 WR^2 = 2.608	Wt. = 43.72 WR^2 = 3.838
550	457.2				Wt. = 1.21 WR^2 = 0.065	Wt. = 8.08 WR^2 = 0.481	Wt. = 16.16 WR^2 = 1.081	Wt. = 33.60 WR^2 = 2.778	Wt. = 45.26 WR^2 = 4.22
600	466.9				Wt. = 0 ① WR^2 = 0	Wt. = 7.81 WR^2 = 0.473	Wt. = 17.03 WR^2 = 1.158	Wt. = 36.77 WR^2 = 3.081	Wt. = 49.94 WR^2 = 4.713
700	517.7					Wt. = 0 ① WR^2 = 0	Wt. = 9.22 WR^2 = 0.684	Wt. = 28.97 WR^2 = 32.607	Wt. = 42.22 WR^2 = 4.248
750	609.6							Wt. = 14.26 WR^2 = 1.468	Wt. = 29.15 WR^2 = 3.310
800	650.8							Wt. = 5.77 WR^2 = 0.631	Wt. = 22.34 WR^2 = 2.682
850	695.5								Wt. = 10.62 WR^2 = 1.355
925	733.5								Wt. = 0 ① WR^2 = 0
1000	803.2	No industry standards exist for adapters to fit couplings this size or larger. Consult Rexnord.							

* Weight adder values are given in kg. WR^2 values are given in kg-m^2.

① Wt. and WR^2 is zero if the listed minimum adapter "A" diameter is the same as complete coupling calculated values in general dimension tables on page 18.

NOTE: Add Wt. and WR^2 values listed in table to the weight and inertia values provided on page 18 for given size to calculate actual values based on selected adapter size.

Rexnord Thomas Flexible Disc Couplings

Type SN-GA

Replaces troublesome gear couplings on pulp and paper applications. The Thomas one-piece, factory-torqued assembly is easy to install. This coupling is designed to bolt directly to existing rigid hubs using the gear coupling bolts. Axial shims are supplied for minor axial positioning adjustment.

Construction

Hubs and Center Assembly: Carbon steel
Bolts: Alloy steel
Disc Packs: Stainless Tpack
Coatings Available: Consult Rexnord
Other disc pack materials such as Tomaloy, stainless steel, Monel and Inconel are available; please consult Rexnord.
Misalignment: 1/3° per disc pack

Available Adapters

Gear Coupling (Falk) / Thomas Coupling	#1½ (1015)	#2 (1020)	#2½ (1025)	#3 (1030)	#3½ (1035)	#4 (1040)	#4½ (1045)	#5 (1050)	#5½ (1055)	#6 (1060)	#7 (1070)
226											
262											
312											
350											
375											
425											
450											
500T											
550T											
600T											
700T											
750T											
800T											
850T											

Available In These Sizes

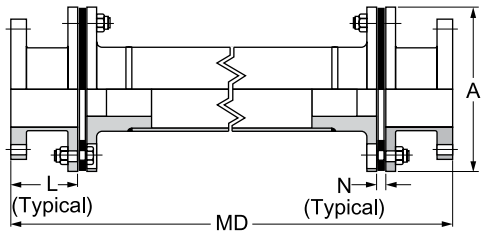

For other sizes, please consult Rexnord.

Coupling Size	Max. Kilowatt per 100 RPM — Service Factor 1.0	Max. Continuous Torque (Nm)	② Peak Overload Torque (Nm)	A	L	Min. MD	N	① Axial Capacity (mm)
226	16.9	1611	3222	148	102	413	14.7	±0.91
262	26.0	2486	4971	170	114	438	11.9	±1.09
312	33.3	3186	6372	198	130	508	12.7	±1.29
350	41.5	3966	7931	222	135	562	13.7	±1.42
375	92	8733	17467	246	168	660	15.0	±1.57
425	139	13315	26629	267	165	667	15.7	±1.70
450 ③	161	15365	30731	287	171	724	19.8	±1.82
500T	275	26257	52513	327	184	762	19.8	±2.00
550T	318	30414	60828	367	197	851	23.1	±2.33
600T	486	46435	92870	406	232	933	24.9	±2.59
700T	649	62026	124052	464	235	1029	30.5	±2.92
750T	746	71290	142581	503	248	1092	32.3	±3.17
800T	1074	102586	205172	546	260	–	34.0	±3.45
850T	1309	125069	250138	584	260	–	35.6	±3.65

① All Thomas disc couplings meet NEMA frame sleeve bearing motor specifications without modification or the addition of end-float restricting devices.
② The peak overload torque is not an alternating torque limit.
③ Available with Tpack for new couplings, not retrofittable in size 450.

NOTE: Dimensions subject to change. Certified dimensions of ordered material furnished on request.

Rexnord Thomas Flexible Disc Couplings

Floating Shaft Types SN, SF, SV

Floating shaft couplings are used to connect units which are relatively far apart. Such arrangements are particularly suited to transmit power into areas where moisture, dust or corrosive conditions would adversely affect the driving machinery. Floating shaft couplings' operating speeds are dependent upon the length of span required. Refer to the speed/span table for speed recommendations. In addition, special balancing may be required for high-speed service or for extended shaft lengths. Consult Rexnord for intended applications at speeds not covered in the table. The SN, SF and SV type couplings are furnished with stainless steel disc packs unless otherwise specified.

Type SN

Full-Floating Shaft Coupling

Type SN couplings use a tubular center shaft, fabricated complete by Rexnord. Typical applications include cooling tower fan drives, paper machinery, printing presses, pumps and compressors.

Connected shafts should be rigidly supported and long shaft overhang should be avoided. The tubular coupling shaft MUST NOT be supported with a bearing. They may be operated vertically if length does not exceed 36 in.

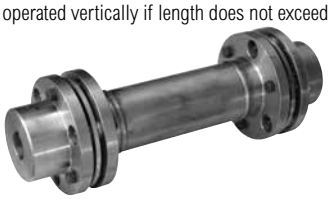

Type SF

Semi-Floating Shaft Coupling

Type SF couplings are a tubular shaft design with a stub shaft and bearing journal replacing the half-coupling on one end. They are typically used in tandem with the Type SN or Type SV where spans are too long for a single section of shafting.

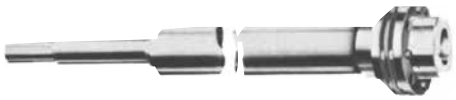

Type SV

Vertical Floating Shaft Couplings

Type SV couplings are similar to the Type SN except that the lower half-coupling is modified to support the weight of the floating shaft. Typical applications include fresh-water pumps, sewage pumps, and marine cargo pumps. They may be used in tandem with the Type SF where spans are too long for a single shaft.

Corrosion Resistant Materials

Types SN, SV and SF couplings are particularly suited to applications involving wet or corrosive conditions, for this reason they are all furnished with 300 series stainless steel disc packs. For extremely corrosive environments, 316 stainless steel, Inconel 625 or Monel disc pack materials are available on request. As standard, these couplings are available in the following material classes.

NOTE: The stub shaft on the SF coupling is always furnished as unplated carbon steel in classes A, B, C and D. Couplings may be painted with acid and alkali resistant paints or coating besides the corrosion resistant classes listed.

CLASS

A – All steel
B – All steel – zinc plated
C – All steel – zinc plated w/stainless steel hardware
D – Stainless steel except for zinc plated hubs
E – All 300 series stainless steel

Floating Shaft Couplings

Types SN, SV and SF center members are of tubular construction, requiring special considerations for the operating speed and span length. The graph to the right may be used as a guide when determining whether it is desirable to balance the center member.

The standard procedure for balancing of SN, SV and SF couplings includes straightening of the tubular shaft prior to balancing. Many couplings of this type operate relatively near to the lateral resonant frequency of the coupling center member, and special balancing techniques are often required. For speeds 1800 RPM and under see page 4 for balancing recommendations. Consult Rexnord for any application with speed in excess of 1800 RPM.

Rexnord Thomas Floating Shaft Coupling

Types SN, SF, SV

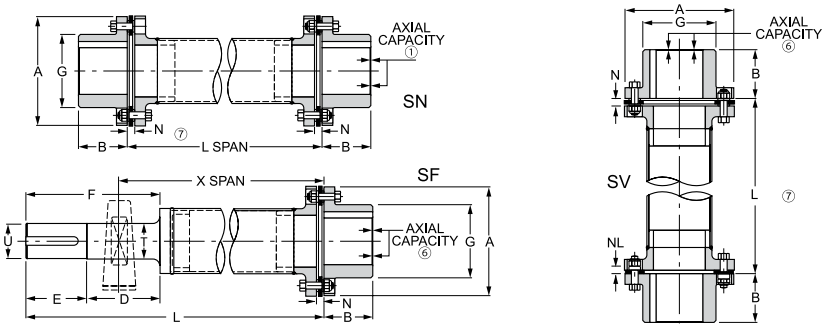

General Dimensions

⑤ Coupling Size	Coupling Type			Max. Bore	A	B	D	E	③ T	③ U	F	G	N	NL	② Min. L	
	SN	SV	SF ⑧												SN	SF
50	•			16	51	22	–	–	–	–	–	25	6.1	–	102	–
62	•			19	62	28	–	–	–	–	–	30	8.1	–	114	–
75	•			22	68	29	–	–	–	–	–	37	8.4	–	121	–
100	•	•	•	29	82	35	95	44	24	22	140	43	11.4	3.3	146	305
125	•	•	•	35	98	41	108	54	30	29	162	52	13.2	3.8	159	310
162	•	•	•	48	114	48	114	67	37	35	181	70	13.7	4.1	171	335
200	•	•	•	57	138	54	140	73	43	41	213	83	14.5	4.1	191	394
226*	•	•	•	67	148	67	143	86	49	48	229	96	14.7	4.6	210	419
262	•	•	•	80	170	76	156	95	56	54	251	114	11.9	5.6	210	457
312	•	•	•	92	198	86	162	102	62	60	264	133	12.7	6.4	248	495
350	•	•	•	102	222	95	191	114	75	73	305	149	13.7	7.4	292	521
375	•	•	•	114	246	102	203	121	87	86	324	165	15.0	8.4	324	589
425	•	•	•	121	267	108	229	127	94	92	356	178	15.7	9.4	337	640
450*	•	•		130	287	114	–	–	–	–	–	189	19.8	10.2	381	–
500T	•	•		137	327	127	–	–	–	–	–	213	19.8	11.9	394	–
550T	•	•		152	367	140	–	–	–	–	–	240	23.1	13.5	457	–
600T	•	•		165	406	152	–	–	–	–	–	260	24.9	15.2	470	–
700T	•	•		191	464	178	–	–	–	–	–	298	30.5	17.8	559	–
750T	•	•		203	503	191	–	–	–	–	–	321	32.3	19.6	597	–
800T	•	•		222	546	210	–	–	–	–	–	346	34.0	21.3	660	–
850T	•	•		235	584	222	–	–	–	–	–	368	35.6	22.9	914	–
925T	•	•		257	635	241	–	–	–	–	–	400	38.1	25.4	914	–

⑤ Coupling Size	Max. Continuous Torque (Nm)	Peak Overload Torque (Nm)	④ Weight (kg)		Weight Change Per mm of "L" (kg)	④ WR^2 (kg-m^2)		WR^2 Change Per mm of "L" (kg-m^2-m)	① ⑥ Type SN Axial Capacity (mm)
			SN, SV	SF		SN, SV	SF		
50	19	38	0.499	–	0.00039	0.147	–	0.0194	±0.58
62	33	66	0.726	–	0.00054	0.352	–	0.0470	±0.71
75	46	93	1.09	–	0.00093	0.557	–	0.134	±0.81
100	93	185	2.22	1.63	0.00136	1.55	0.908	0.246	±0.96
125	252	504	3.41	2.95	0.00170	3.57	2.08	0.505	±1.16
162	480	960	4.99	4.77	0.00232	7.91	4.4	1.64	±0.91
200	972	1943	9.53	4.99	0.00518	9.38	4.98	4.17	±0.91
226*	1611	3222	12.08	11.35	0.00589	30.8	17.9	6.10	±0.91
262	2486	4971	17.52	16.34	0.00732	63.9	39	11.91	±1.09
312	3186	6372	28	25	0.00839	133.6	85.3	16.38	±1.29
350	3966	7931	39	35	0.00929	236	140	23.06	±1.42
375	8733	17467	58	50	0.0173	416	247	54.36	±1.57
425	13315	26629	79	–	0.0282	717	–	118	±1.70
450*	15365	30731	94	–	0.0282	982	–	118	±1.82
500T	26257	52513	109	–	0.0425	1452	–	305	±2.02
550T	30414	60828	153	–	0.0425	2461	–	305	±2.33
600T	46435	92870	201	–	0.0602	4251	–	678	±2.59
700T	62026	124052	326	–	0.0814	8195	–	894	±2.92
750T	71290	142581	400	–	0.0814	11799	–	894	±3.17
800T	102586	205172	518	–	0.0973	18802	–	1527	±3.45
850T	125069	250138	645	–	0.107	26877	–	2040	±3.65
925T	165629	331257	826	–	0.123	42046	–	3081	±3.96

① All Thomas disc couplings meet NEMA frame sleeve bearing motor specifications without modification or the addition of end-float restricting devices.
② Shorter "L" requires special construction. Consult Rexnord.
③ Shaft tolerances: 5/16 to 1-1/2 + .000 - .0005. 1-5/8 to 3-11/16 .000 - .001. Key furnished with standard keyway in SF stub shaft.
④ Weight and WR^2 at max. bore and min. "L" dimension.
⑤ T suffix to coupling size indicates thin flange design. Consult Rexnord for larger sizes.
⑥ Types SF and SV end-float is one half ± value shown for type SN.
⑦ Maximum span (L) in inches for various speeds - For SN & SV
⑧ Consult Rexnord for larger sizes.
*Not available with Tpack.

NOTE: Dimensions subject to change. Certified dimensions of ordered material furnished on request.

Rexnord Thomas Floating Shaft Coupling

Types SN, SF, SV

Maximum Span at Given RPM

Coupling Size	3600 RPM	3000 RPM	1800 RPM	1500 RPM	1200 RPM	1000 RPM	900 RPM	750 RPM	720 RPM	600 RPM	500 RPM
50	Consult Rexnord		43	47	52	56	56	56	56	56	56
62			50	54	61	67	70	75	75	75	75
75			56	61	68	75	79	86	88	94	94
100	41	45	57	64	71	78	82	91	93	102	102
125	47	51	64	72	81	88	93	103	105	114	114
162	54	59	75	84	94	103	109	119	122	133	133
200	60	66	85	93	104	114	120	132	135	147	161
226	64	70	90	99	112	122	128	141	144	157	172
262	71	77	100	110	123	135	142	156	160	173	191
312	75	82	107	117	130	143	151	165	173	185	203
350	79	87	113	123	138	151	159	174	178	195	213
375	87	95	123	135	151	165	174	191	195	213	234
425	90	99	128	141	157	172	182	199	203	222	244
450*	90	99	128	141	157	172	182	199	203	222	244
500T	104	113	147	161	180	197	207	227	232	254	279
550T	Consult Rexnord		147	161	180	197	207	227	232	254	279
600T			165	180	202	221	233	255	260	285	312
700T			164	179	200	219	231	253	258	283	310
750T			164	179	200	219	231	253	258	283	Consult Rexnord
800T			179	196	219	240	252	276	282	309	
850T			187	205	229	251	265	290	296	Consult Rexnord	
925T			200	220	245	269	284	311	317		

* Not available with Tpack

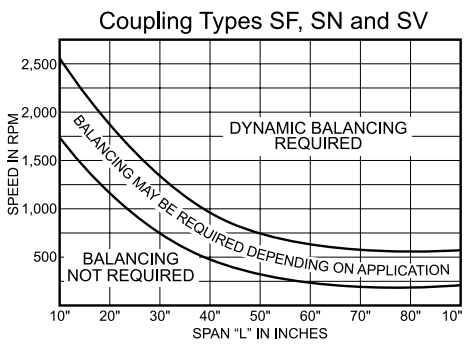

Type SN Adjustable

Type SN adjustable couplings were developed as emergency replacements for standard Type SN couplings and are available from stock in most sizes required for cooling tower applications. Each shaft may be adjusted through a four-inch length range, using a special compression bushing to lock the shaft in place once the length is set.

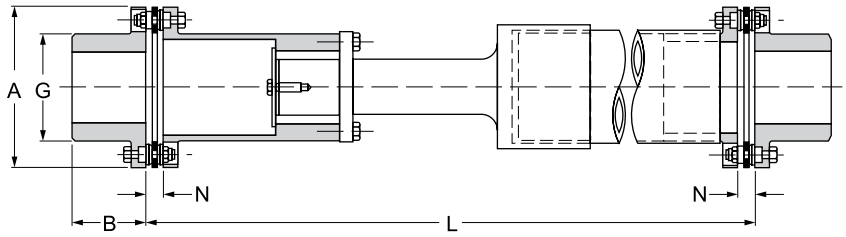

General Dimensions (mm)

Coupling Size	Max. Bore	A	B	G	H	Min. "L"	Adjustment Range	② Weight (kg)	Weight Change Per mm of "L" (kg)	② WR^2 ($kg\text{-}m^2$)	WR^2 Change per mm of "L" ($kg\text{-}m^2$)	① Axial Capacity (mm)
162	48	114	48	70	14	362	101.6	8.6	0.06	0.0108	0.0640	±0.91
200	57	138	54	83	14	384	101.6	13.6	0.13	0.0234	0.164	±0.91
226	67	148	67	96	15	439	101.6	19.5	0.15	0.0442	0.240	±0.91
262	79	170	76	114	12	480	101.6	27.7	0.19	0.0741	0.469	±1.09

① All Thomas disc couplings meet NEMA frame sleeve bearing motor specifications without modification or the addition of end-float restricting devices.

② Weight and WR^2 at maximum bore.

NOTE: Dimensions subject to change. Certified dimensions of ordered material furnished on request.

Rexnord Thomas Single-Flexing Disc Couplings

Type ST

ST couplings are designed for applications which require the coupling to support a substantial radial load while accommodating angular misalignment. Typical installations include units where one shaft is fully supported in its own bearings and the other shaft is single-bearing supported. The radial load is transmitted through the coupling to the inner bearing of the other shaft. Belt drives can be designed to utilize this type of coupling to eliminate a jack shaft bearing and transfer radial loading directly to a machine bearing. Such arrangements are economical and space saving. See the sketches to the right.

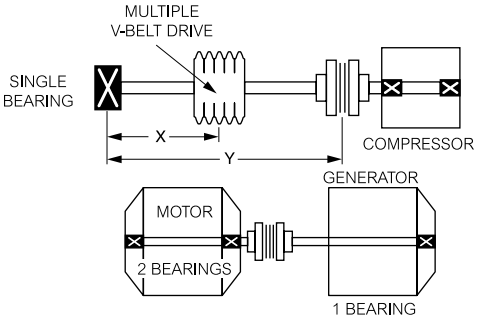

Construction

Hubs: Carbon steel
Bolts: Alloy steel
Disc Packs: Tomaloy Tpack not available
Coatings Available: Contact Rexnord.
Other disc pack materials such as stainless steel, Monel and Inconel are available; please consult Rexnord.

NOTE:
Single-flexing couplings cannot accommodate parallel misalignment. They are not suitable for connecting equipment where both shafts are held rigidly in their own bearings.

General Dimensions (mm)

Coupling Size	⑦ Rough Bore	Max. Bore	A	B	F	G	N
162	–	50	116	44	155	70	10
200	–	58	146	54	184	92	11
225	–	70	152	64	203	99	11
262	–	84	175	73	235	114	13
312	–	97	206	86	276	138	16
350	–	110	232	95	306	152	18
375	–	120	256	102	333	165	22
425	–	130	279	108	357	178	23
450	–	140	302	114	379	189	24
500	68	146	341	127	427	213	29
550	68	166	381	140	475	240	33
600	94	176	425	152	519	262	35
700	108	205	481	178	600	298	–
750	125	224	524	184	635	321	–
800	132	241	568	197	683	349	–

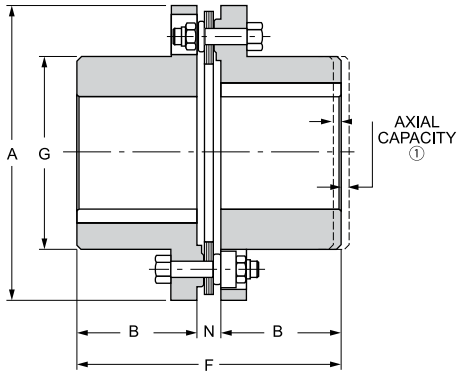

Coupling Size	Max. Radial Load (kg)	Max. Kilowatt per 100 RPM						Max. RPM	⑥ Max. Continuous Torque (Nm)	⑥ Peak Overload Torque (Nm)	② Weight (kg)	② WR^2 ($kg\text{-}m^2$)	① Axial Capacity (mm)
		Smooth			Pulsating								
		③ Col. 1	④ Col. 2	⑤ Col. 3	③ Col. 4	④ Col. 5	⑤ Col. 6						
162	68	0.6	0.8	1.0	0.3	0.4	0.5	2,500	99	149	3.2	0.00469	±0.45
200	102	1.1	1.6	2.0	0.5	0.7	1.0	2,500	192	288	6.4	0.0135	±0.45
225	154	1.6	2.2	2.8	0.7	1.1	1.4	2,500	271	407	6.8	0.0173	±0.45
262	236	2.8	4.0	5.1	1.4	1.9	2.5	2,500	484	725	10.4	0.0352	±0.55
312	318	4.5	6.3	8.0	2.2	3.1	4.0	2,500	761	1,141	18.6	0.0908	±0.66
350	409	6.4	8.9	11.5	3.1	4.5	5.7	2,300	1,089	1,638	25.4	0.152	±0.71
375	568	9.8	13.7	17.7	4.9	6.9	8.8	2,200	1,683	2,531	32.2	0.240	±0.78
425	681	12.7	17.8	23	6.4	8.9	12.2	1,900	2,181	3,276	42.2	0.381	±0.86
450	817	16.3	23	29	8.1	11.4	14.6	1,500	2,779	4,169	49.9	0.498	±0.91
500	1090	25	35	45	12.6	17.5	23	1,500	4,293	6,440	72.6	0.908	±1.04
550	1453	37	51	65	18.3	26	33	1,500	6,191	9,287	104.4	1.64	±1.16
600	1816	51	72	92	26	36	46	1,200	8,756	13,106	136.2	2.46	±1.29
700	2497	79	111	142	40	55	71	1,100	13,558	20,336	199.8	5.27	±1.47
750	2951	104	145	187	52	73	94	1,000	17,851	26,776	267.9	7.91	±1.58
800	3496	133	185	238	66	93	119	900	22,596	33,894	317.8	11.43	±1.72

① All Thomas disc couplings meet NEMA frame sleeve bearing motor specifications without modification or the addition of end-float restricting devices.
② Weight and WR^2 at maximum bore.
③ Col. 1 and 4 give maximum HP/100 RPM permitted when combined with maximum radial load.
④ Col. 2 and 5 give maximum HP/100 RPM permitted when combined with 2/3 maximum radial load.
⑤ Col. 3 and 6 give maximum HP/100 RPM permitted when combined with 1/3 maximum radial load.
⑥ Maximum torque and peak overload torque are based on 1/3 maximum radial load.
⑦ Consult Rexnord for minimum rough bore on sizes 162-450.

NOTE: Dimensions subject to change. Certified dimensions of ordered material furnished on request.

Rexnord Thomas Single-Flexing Disc Couplings

Type SN Single

Type SN single couplings are used for floating shaft applications where the user wishes to supply his own intermediate solid shaft, or for single-flexing applications where light-to-moderate radial loads occur. They are generally more economical than ST couplings.

Construction

Hubs: Carbon steel
Bolts: Alloy steel
Disc Packs: Tomaloy Tpack (not available for size 450)
Coatings Available: Consult Rexnord
Other disc pack materials such as stainless steel, Monel and Inconel are available; please consult Rexnord.
Misalignment: 1/3° per disc pack

NOTE:
Single-flexing couplings cannot accommodate parallel misalignment. They are not suitable for connecting equipment where both shafts are held rigidly in their own bearings.

General Dimensions (mm)

Coupling Size	② Max. Bore	A	B	F	G	N
100	28	82	35	82	43	11.4
125	34	98	41	96	52	13.2
162	50	114	48	109	70	13.7
200	58	138	54	123	83	14.5
226	70	148	67	148	96	14.7
262	84	170	76	164	114	11.9
312	97	198	86	184	133	12.7
350	110	222	95	204	149	13.7
375	120	246	102	218	165	15.0
425	130	267	108	232	178	15.7
450	140	287	114	248	189	19.8
500T	146	327	127	274	213	19.8
550T	166	367	140	303	240	23.1
600T	176	406	152	330	260	24.9
700T	205	464	178	386	298	30.5
750T	224	503	191	413	321	32.3

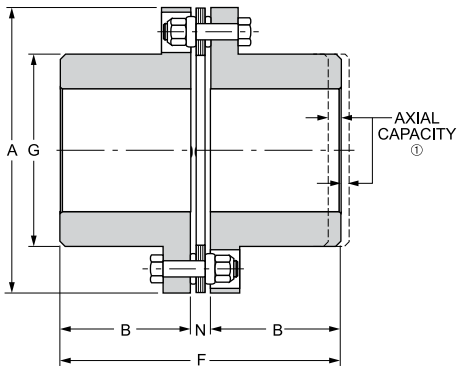

Coupling Size	Max. Kilowatt Per 100 RPM Service Factor 1.0	Max. RPM	Max. Continuous Torque (Nm)	Peak Overload Torque (Nm)	③ Weight (kg)	③ WR^2 ($kg\text{-}m^2$)	① Axial Capacity (mm)
100	0.97	7,100	93	185	1.0	0.0008	±0.48
125	2.64	6,500	252	504	1.7	0.0019	±0.58
162	5.03	6,000	480	960	2.6	0.0050	±0.45
200	10.2	5,500	972	1943	5.0	0.0108	±0.45
226	16.9	5,200	1611	3222	6.4	0.0155	±0.45
262	61	4,800	5966	11931	10.4	0.0342	±0.55
312	61	4,500	5,803	11605	16.8	0.0772	±0.66
350	79	4,100	7,552	15105	23.6	0.134	±0.71
375	119	3,900	11,323	22646	32.2	0.225	±0.78
425	159	3,700	15,161	30323	40.4	0.339	±0.86
450	178	3,600	16,979	33958	54.9	0.462	±0.91
500T	292	2,800	27,817	55633	68.1	0.837	±1.04
550T	391	2,500	37,300	74599	95.3	1.50	±1.16
600T	513	2,300	48,973	97945	116.7	2.05	±1.29
700T	799	2,000	76,180	152359	177.1	3.54	±1.47
750T	992	1,800	94,694	189388	242.4	7.21	±1.58

① All Thomas disc couplings meet NEMA frame sleeve bearing motor specifications without modification or the addition of the end-float restricting devices.
② Consult Rexnord for minimum rough bore on sizes 162-450.
③ Weight and WR^2 shown at maximum bore.

NOTE: Dimensions subject to change. Certified dimensions of ordered material furnished on request.

Rexnord Thomas Flexible Disc Couplings

High Performance THP

THP couplings are designed for use on high-speed equipment where coupling size and weight must be kept to a minimum. Typically, these couplings connect prime movers such as motors, steam and gas turbines, rotary engines and gas expanders, to centrifugal and rotary compressors, generators, process and boiler feed pumps. Test stand and marine propulsion drives also benefit from this unique coupling design.

The flexing elements are precision-stamped from a high-strength 300 series stainless steel. This material has been used successfully for many years in Thomas couplings manufactured for helicopter drive shaft applications. Special materials for hubs, spacers and/or flexing elements are available to meet unique application requirements.

Construction

Hubs and Center Member: Heat treated 4140 and 4340 alloy steel
Bolts: Aircraft quality alloy steel with 12-point wrenching pattern
Disc Packs: High strength 300 series stainless steel
Coatings Available: Black oxide, zinc, cadmium and other coatings available per customer specification.
Other disc pack materials such as Monel and Inconel are available; please consult Rexnord.

General Dimensions (mm)

Coupling Size	A	B	C	D	E	F	② G	① Max. Bore Hydraulic H	L	M	N
442-6	137	52	457	79	73	587	76	51	3.2	114	96
519-6	162	66	457	98	92	618	95	64	3.2	135	114
519-8	164	66	457	98	92	618	95	64	3.2	135	114
638-6	195	79	457	117	111	646	114	76	3.2	162	127
638-8	195	79	457	117	111	646	114	76	3.2	162	128
744-6	225	94	457	138	130	676	133	89	3.2	189	133
744-8	225	94	457	138	130	676	133	89	3.2	189	133
850-6	257	106	457	159	149	705	152	102	3.2	211	159
850-8	257	106	457	159	149	705	152	102	3.2	211	161
948-6	291	119	457	178	167	733	171	114	3.2	237	181
948-8	291	119	457	178	167	733	171	114	3.2	237	182
1025-6	318	134	457	197	184	770	191	127	3.2	263	201
1025-8	318	134	457	197	184	770	191	127	3.2	263	203

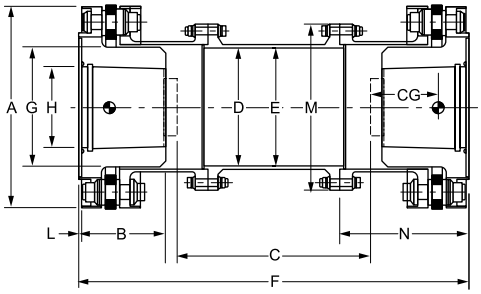

Coupling Size	① Max. Standard Bore (mm)	③ ④ Max. Continuous Torque Rating (Nm)	Max. Speed RPM	⑤ Weight (kg)	⑤ WR^2 ($kg\text{-}m^2$)	⑤ Half Coupling C.G. (mm)	⑤ Torsional Stiffness $K_t \times 10^6$ (Nm/Rad)	Spacer Tube Per Inch			⑥ Axial Capacity Continuous (mm)
								$K_t \times 10^6$ (Nm/Rad)	Weight (kg)	WR^2 ($kg\text{-}m^2$)	
442-6	51	3050	28,500	9.7	0.02	41.7	0.0884	3.45	0.150	0.000217	±3.05
519-6	64	5760	24,000	16.0	0.05	51.1	0.181	6.73	0.187	0.000424	±3.68
519-8	64	8470	23,800	16.4	0.05	51.1	0.208	6.73	0.187	0.000424	±2.54
638-6	76	8810	19,900	24.7	0.11	61.7	0.322	11.6	0.224	0.000734	±4.44
638-8	76	8810	19,900	24.7	0.11	62.0	0.369	11.6	0.224	0.000734	±3.18
744-6	89	14100	17,200	37.3	0.214	72.9	0.566	23.5	0.224	0.00148	±5.21
744-8	89	19900	17,200	38.0	0.222	73.2	0.656	23.5	0.330	0.00148	±3.68
850-6	102	22000	15,100	56.7	0.430	80.8	0.917	42.7	0.454	0.00269	±5.97
850-8	102	33200	15,100	57.6	0.448	81.0	1.08	42.7	0.454	0.00269	±4.19
948-6	114	32200	13,400	78.9	0.761	90.7	1.45	69.7	0.594	0.00439	±6.73
948-8	114	48300	13,400	80.7	0.799	90.7	1.74	69.7	0.594	0.00439	±4.70
1025-6	127	42400	12,250	107	1.24	102	2.09	108	0.748	0.00679	±7.37
1025-8	127	65400	12,250	109	1.30	103	2.52	108	0.748	0.00679	±5.21

① For larger bores, consult Rexnord.
② May be reduced for smaller shaft sizes. Consult Rexnord.
③ Minimum service factor to be applied = 1.5
④ Max. peak overload torque = 1.33 x max. cont. torque
⑤ Information based on standard dimensional data shown.
⑥ Max. transient axial misalignment = 120% of values shown above.

NOTE: Dimensions subject to change. Certified dimensions of ordered material furnished on request.

Rexnord Thomas Flexible Disc Couplings

High Performance Series 63

Series 63 couplings incorporate a patented* one-piece disc/diaphragm flexing element for positive torque transmission with low restoring forces. This unitized assembly accommodates misalignment and transmits torque through a multiple disc arrangement which provides redundancy in construction with a high degree of reliability. Pilot plates on the sides of each flexing element give accurate, repeatable registration of coupling components, and retain original dynamic balance repeatability while protecting the flexing members from damage.

Series 63 couplings are ideal for the most demanding drive requirements. Prime movers include motor, steam and gas turbines, rotary engines, and gas expanders. Driven equipment applications include centrifugal and rotary compressors, generators, test stands, boiler feed pumps and other multi-stage pumps, and marine propulsion drives. Custom designs available for torsional tuning and reduced moment.

*U.S. Patent 4055966

To determine Kt for a coupling with longer than standard "C" dimension, use the formula shown to the right:

$$Kt = \frac{1}{\frac{1}{Kt} + \frac{\blacktriangle L}{\blacktriangle Kt}}$$

Where ▲L = additional "C" dimension required ▲Kt = torsional stiffness change per inch of "C" dimension and 1/Kt - inverse of catalog value.

Construction

Hubs and Center Member: Heat-treated alloy steel
Bolts: Alloy steel
Disc Packs: High strength 300 series stainless steel
Coatings Available: Consult Rexnord
Other disc pack materials such as stainless steel, Monel and Inconel are available; please consult Rexnord.

When specified, Series 63 couplings meet all requirements of API 671.
If application requires API specification, please consult Rexnord.

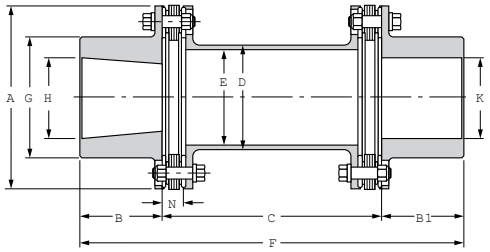

General Dimensions (mm)

Coupling Size	Max. Bore		A	B	B1	① Std. C	Min. C	D	E	F	② G Max.	N	Capacity
	Hydraulic H	Keyed K											
162	51	48	108	52	48	127	83	61	56	227	71	13.46	±1.27
200	67	62	139	70	62	127	105	86	81	259	93	17.27	±1.77
225	71	67	145	74	67	127	108	89	84	267	100	17.78	±1.39
262	82	76	171	86	76	152	121	100	94	314	114	19.81	±1.52
312	95	89	203	100	89	152	127	121	113	341	133	23.88	±1.90
350	106	99	226	111	99	178	164	127	119	388	148	28.70	±2.03
375	119	111	251	124	111	178	168	154	145	413	167	29.72	±2.28
425	126	117	272	134	117	203	187	165	154	455	176	33.27	±2.54
450	136	127	292	145	127	203	194	178	166	475	191	34.80	±2.79
500	152	142	333	164	142	229	216	197	183	535	213	37.59	±3.04
550	170	159	375	187	159	251	251	222	205	597	238	43.94	±3.55
600	186	173	416	205	173	286	286	238	218	664	260	51.56	±3.81
700	208	194	475	228	194	305	–	270	246	726	291	53.34	±4.44
750	224.5	209.6	515.9	246.1	209.6	355.6	–	300.0	274.3	811.3	314.5	58.42	±4.82

Coupling Size		Dynamic Data		④ Standard Mass-Elastic Data						
	③ Max. Speed RPM	Max. Continuous Torque (Nm)	Peak Overload Torque (Nm)	Weight (kg)	WR^2 ($kg\text{-}m^2$)	$Kt \times 10^6$ (kg-mm/Rad)	C.G. (mm)	Change per mm of "C"		
								Weight (kg)	WR^2 ($kg\text{-}m^2$)	$Kt \times 10^6$ (kg-mm/Rad)
162	36,000	665	1,661	3.5	0.00483	5.78	9.4	0.086	0.00008	121.0
200	28,600	1,537	3,841	7.4	0.01752	20.51	14.2	0.122	0.00022	344.5
225	26,700	2,384	5,954	8.7	0.02291	26.84	15.7	0.127	0.00024	387.1
262	22,500	4,271	10,677	13.9	0.04893	44.93	17.0	0.191	0.00045	722.4
312	19,100	7,242	18,078	23.1	0.116	65.21	18.8	0.286	0.00098	1578
350	17,200	9,253	23,162	31.4	0.195	109.9	20.1	0.304	0.00114	1843
375	15,600	14,236	35,590	42.2	0.322	141.7	25.1	0.404	0.00226	3652
425	14,300	19,094	47,793	53.5	0.478	218.9	24.6	0.549	0.00349	5657
450	13,300	24,066	60,221	66.7	0.683	241.9	27.7	0.612	0.00454	7328
500	11,600	35,703	89,258	97.1	1.275	400.9	30	0.839	0.00756	12213
550	10,300	51,295	128,238	139.7	2.306	574.9	34	1.15	0.0132	21314
600	9,300	71,180	177,951	188.7	3.809	706.3	35	1.43	0.0186	30070
700	8,200	102,025	255,120	274.4	7.21	1152	37	1.93	0.0322	51961
750	7,500	129,933	324,831	350.6	10.84	1509	39	2.28	0.0475	76040

① Standard dimension - may be modified as necessary.
② "G" dimension at listed maximum bore and will vary depending on bore size.
③ Consult Rexnord with higher speed requirements.
④ Weight and C.G. data based on standard "C" dimension, maximum hydraulic bores (H) and hydraulic hub lengths (B). Torsional stiffness (K_t) assumes a 1/3 shaft penetration factor.

NOTE: Dimensions subject to change. Certified dimensions of ordered material furnished on request.

Rexnord Thomas Miniature Couplings

Thomas Miniature Flexible Disc Couplings

Construction

Hubs and Center Member: Aluminum alloy, anodized
Rivets: Brass
Washers: Brass
Discs: Stainless steel
Set screws: 18-8 Stainless steel, Passivated
Max. Temperature: 250˚F
Available with electronically insulated phenolic material.

Guide to Proper Designation of Hubs

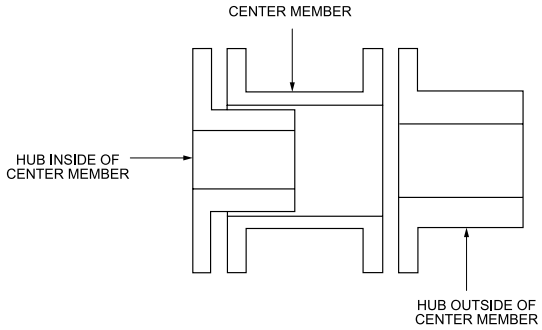

Style CC

This coupling has both hubs inverted and is designed to fit shafts normally encountered at a given torque range. Ideal for use where space limitations require close coupling of the shafts.

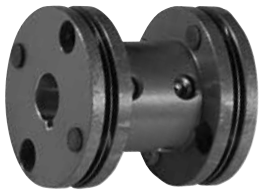

General Dimensions (mm)

Coupling Size	A	B	C	F	T	① Torque Capacity (Nm)
12	12.7	6.4	0.8	13.5	0.46	0.12
18	19.1	9.5	1.6	20.6	0.58	0.25
25	25.4	12.7	1.6	27.0	0.64	0.53
37	36.5	17.5	3.2	38.1	0.89	2.15
50	44.5	23.8	3.2	50.8	1.14	8.47
62	57.2	27.0	3.2	57.2	1.52	33.90
75	63.5	30.2	3.2	63.5	1.52	49.71
100	76.2	34.9	6.4	76.2	1.52	79.09

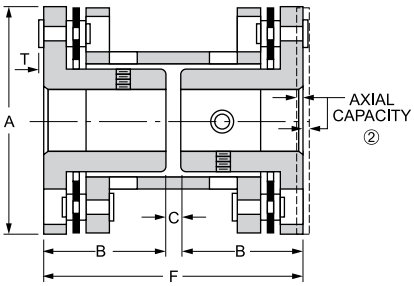

① Torque capacities are based on smooth drives with moderate torque fluctuations. Reduce ratings to 1/3 the value shown for severe applications such as indexing drives where torque reversals occur.
② All Thomas disc couplings meet NEMA frame sleeve bearing motor specifications without modification or the addition of end-float restricting devices.

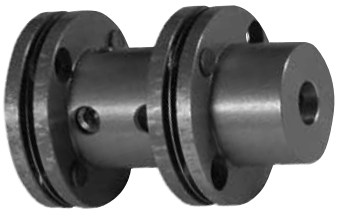

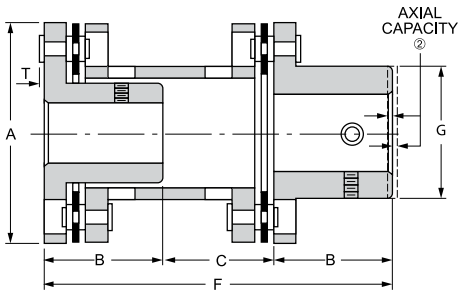

Style CA

This design of our miniature coupling has one inverted hub to accept a normal shaft and one extended hub to accommodate oversize shafts. It also accommodates a larger shaft gap than the Style CC.

General Dimensions (mm)

Coupling Size	A	B	C	F	G	T	① Torque Capacity (Nm)
12	12.7	6.4	6.0	18.7	7.9	0.46	0.12
18	19.1	9.5	9.5	28.6	11.9	0.58	0.25
25	25.4	12.7	11.9	37.3	15.9	0.64	0.53
37	36.5	17.5	17.5	52.4	22.2	0.89	2.15
50	44.5	23.8	23.0	70.6	27.0	1.14	8.47
62	57.2	27.0	25.4	79.4	34.9	1.52	33.90
75	63.5	30.2	28.6	88.9	41.3	1.52	49.71
100	76.2	34.9	34.9	104.8	47.6	1.52	79.09

① Torque capacities are based on smooth drives with moderate torque fluctuations. Reduce ratings to 1/3 the value shown for severe applications such as indexing drives where torque reversals occur.
② All Thomas disc couplings meet NEMA frame sleeve bearing motor specifications without modification or the addition of end-float restricting devices.

NOTE: Dimensions subject to change. Certified dimensions of ordered material furnished on request.

Rexnord Thomas Miniature Couplings

Style CB & CBC

This coupling design has both hubs extended to accept two oversized shafts. Shaft gap is larger than that of the Style CA or CC couplings.

Style CBC is the newest addition to our miniature coupling line. It offers clamping hubs that are an integral part of the coupling. The clamping hubs assure positive fit on the shafts. There are no loose parts to handle during installation. The Style CBC coupling has the same dimensions and torque capacities as the Style CB. Consult Rexnord for additional design and engineering data.

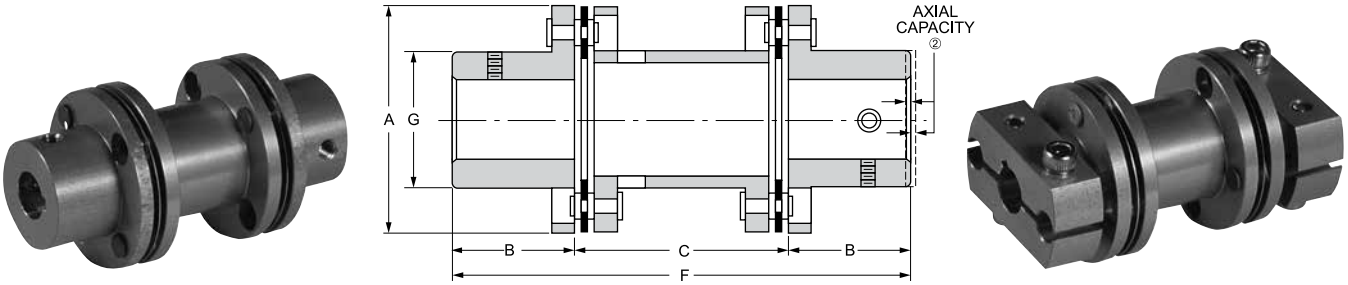

General Dimensions (mm)

Coupling Size	A	B	C	F	G	Torque Capacity (Nm)
12	12.7	6.4	11.1	23.8	7.9	0.13
18	19.1	9.5	17.5	36.5	11.9	0.25
25	25.4	12.7	22.2	47.6	15.9	0.53
37	36.5	17.5	31.8	66.7	22.2	2.15
50	44.5	23.8	42.9	90.5	27.0	8.49
62	57.2	27.0	47.6	101.6	34.9	33.98
75	63.5	30.2	54.0	127.0	41.3	49.83
100	76.2	34.9	63.5	127.0	47.6	79.28

Styles CC, CA, CB & CBC

Ratings and Mass Elastic Data

Coupling Size	Max. RPM	① Approx Weight (kg)	① Approx WR^2 ($kg\text{-}m^2$)	Torsional Rigidity $K_t \times 10^3$ (kg-mm/Rad)	Max. Angular Misalignment Continuous Per Flexing Element	Max. Parallel Misalignment Continuous (mm)	Axial Capacity (Nm)
12	150,000	.003	0.048	4.779	2°	0.381	±0.40
18	100,000	.008	0.324	7.792	2°	0.381	±0.40
25	80,000	.021	1.46	19.128	2°	0.711	±0.78
37	55,000	.057	8.67	127.769	1.5°	0.711	±0.78
50	45,000	.114	25.94	195.527	1°	0.711	±0.78
62	35,000	.265	91.3	509.219	0.67°	0.711	±0.78
75	30,000	.328	157.5	795.300	0.67°	0.711	±0.78
100	25,000	.567	420.7	1072.446	0.50°	0.508	±0.78

① Weight and WR^2 at maximum bore.
② All Thomas disc couplings meet NEMA frame sleeve bearing motor specifications without modifcation or the addition of end-float restricting devices.

NOTE: Dimensions subject to change. Certified dimensions of ordered material furnished on request.

Rexnord Thomas Miniature Couplings

Style CE & CS

The Style CE coupling consists of two Style CS single flexing couplings that are connected by a tubular shaft. It is designed to span large distances between shafts and is ideal for those applications where a large amount of parallel misalignment is anticipated.

The Style CS is designed for applications where one shaft is fully supported in its own bearings and the other shaft is single-bearing supported. The single flexing design can only accept angular misalignment.

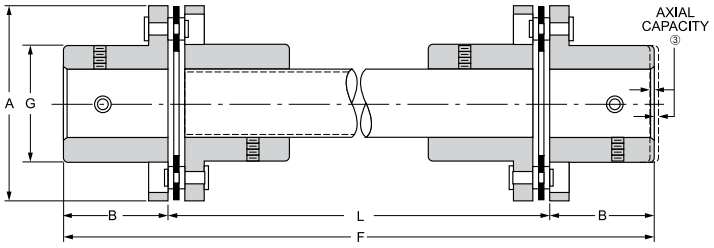

General Data ④

Coupling Size	A (mm)	B (mm)	C (mm)	F (mm)	G (mm)	L (mm)	Max. RPM		① Torque Capacity (Nm)	Weight (kg)		Weight Change Per Inch of "L" (kg)
							Style CE	Style CS		② CE	CS	
12	12.7	6.4	0.8	13.5	8.0	Varies to suit as required	Consult Rexnord	150,000	0.12	0.013	0.002	0.0008
18	19.1	9.5	1.6	20.7	11.9			100,000	0.25	0.027	0.006	0.0014
25	25.4	12.7	2.4	27.8	15.9			80,000	0.53	0.048	0.014	0.0017
37	36.5	17.5	2.8	37.7	22.2			55,000	2.15	0.116	0.040	0.0031
50	44.5	23.8	3.6	51.2	27.0			45,000	8.49	0.221	0.080	0.0051
62	57.2	27.0	4.4	58.3	34.9			35,000	33.98	0.405	0.166	0.0062
75	63.5	30.2	4.8	65.1	41.3			30,000	49.83	0.513	0.171	0.0108
100	76.2	34.9	5.7	75.6	47.6			25,000	79.28	0.811	0.363	0.0119

① Torque capacities are based on smooth drives with moderate torque fluctuations. Reduce ratings to 1/3 the value shown for severe applications such as indexing drives where torque reversals occur.

② Weight calculated at maximum bore and "L" = 12".

③ All Thomas disc couplings meet NEMA frame sleeve bearing motor specifications without modification or the addition of end-float restricting devices.

④ For WR^2, misalignment capacities and torsional rigidity consult Rexnord.

Standard Bore Sizes for Style CC, CA, CB, CBC, CE & CS Miniature Couplings ①

Coupling Size	Bores ②③ (in)	
	Hub Inside Center Member	Hub Outside Center Member
12	0.0781, 0.0937 0.1200, 0.1250	0.1200, 0.1250 0.1562, 0.1875
18	0.0937, 0.1200 0.1250, 0.1562 0.1875	0.1250, 0.1562 0.1875, 0.2500
25	0.1255, 0.1880 0.2505	0.1255, 0.1880 0.2505, 0.3130 0.3755
37	0.1255, 0.1880 0.2505, 0.3130 0.3755	0.1880, 0.2505 0.3130, 0.3755 0.4380, 0.5005

Coupling Size	Bores ②③ (in)	
	Hub Inside Center Member	Hub Outside Center Member
50	0.2505, 0.3130 0.3755, 0.4380 0.5005	0.2505, 0.3130 0.3755, 0.4380 0.5005, 0.6255
62	0.3755, 0.4380 0.5005, 0.6255	0.4380, 0.5005 0.6255, 0.7505
75	0.4380, 0.5005 0.6255, 0.7505	0.5005, 0.6255 0.7505, 0.8755 1.0005
100	0.6255, 0.7505 0.8755, 1.0005	0.7505, 0.8755 1.0005, 1.1255 1.2505

① Couplings not available with rough bore. Keyway not included in standard bore. Keyways and nonstandard bores also available.

② Tolerances: Sizes 12 and 18, ±0.0003". Larger sizes, ±0.0005".

③ The largest bore shown for each hub is maximum allowable bore. Consult Rexnord if a larger bore is required.

NOTE: Dimensions subject to change. Certified dimensions of ordered material furnished on request.

Rexnord Thomas Couplings

Rexnord Thomas Backstop

- Bolts directly to Thomas SN & TSN-CT hubs
- Prevents reverse shaft rotation of cooling tower fans
- All stainless steel construction
- For non-corrosive environments this can be supplied in carbon steel

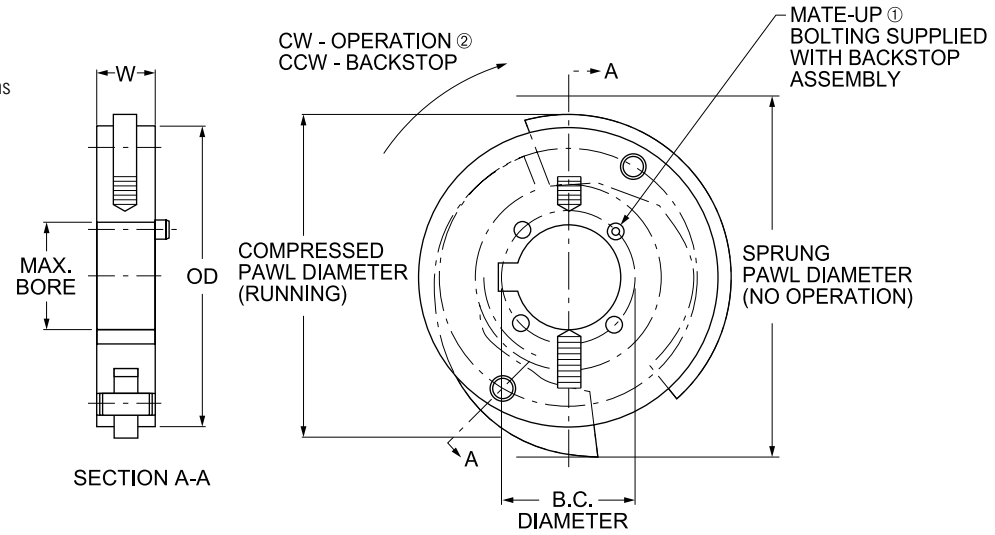

Bolt-On Backstop Tabulation

Coupling Size	Max. Bore	Mating Hub Backstop Bolting Info				OD	W (Ref)	Compressed	Sprung	Compressed Speed (RPM Ref)
		B.C. Dia	① Capscrew Size (Inch for capscrew dimensions)	Min Tap DP	Tight Torque (Nm)					
162	48	58.7	1/4 - 20 NC x 1.50	15.7	2.8	133.35	25.4	144.526	165.1	450 RPM Ref
200	54	68.3	1/4 - 20 NC x 1.50	15.7	2.8					
226	67	82.6	1/4 - 20 NC x 1.50	15.7	4.5	231.648	28.448	233.426	268.224	400 RPM Ref
262	79	98.4	3/8 - 16 NC x 1.75	22.4	16.0					
312	92	112.7	7/16 - 14 NX x 2.00	28.4	25.4					
350/375	102	123.8	1/2 - 13 NC x 2.00	28.4	39.5					

Special integral hub/backstop can be supplied.

① 162 & 200 size supplied with (4) socket head capscrews. All other sizes supplied with four hex head capscrews.

② Backstop may be inversely mounted for opposite rotation.

NOTE: Dimensions subject to change. Certified dimensions of ordered material furnished on request.

Rexnord Thomas Flexible Disc Couplings

Spacer Type Series 52 - SEE PAGES 10-11 FOR UPDATED VERSION WITH ENHANCED FEATURES

Series 52 couplings are all-purpose high-speed, high-torque couplings used where minimum coupling weight is desirable. They are commonly used on motor and turbine driven pumps, compressors and fans. Design modifications may be made to further reduce the coupling weight, making it an economic alternative to high performance disc and diaphragm couplings.

Construction

Hubs and Center Assembly: Carbon Steel
Bolts: Alloy Steel
Disc Packs: Tomaloy Tpack (225-750 Size)
Coatings Available: Black Oxide, Zinc, Cadmium
Other materials such as stainless steel, Monel and Inconel are available; please consult Rexnord.
Misalignment: 1/3° per disc pack

When specified, Series 52 couplings meet all requirements of API 610 or API 671.
If application requires API specification, please consult Rexnord.

General Dimensions (mm)

Coupling Size	⑥ Max. Bore	A	B	② Std. C	② Stocked C	Min. C	F	G	N
125	34	94	33	102	100	Consult	168	52	7
162	50	110	44	127	100, 140	52	216	70	7
200	58	138	52	127	100, 140	67	232	83	9
225	70	145	67	127	100, 140, 180	70	260	96	9
262	84	168	73	127	140, 180	82	273	114	12
312	97	198	86	140	140, 180	95	311	133	13
350	110	221	95	152	180, 250	106	343	149	14
375	120	246	102	178	180, 250	117	381	165	15
425	130	267	108	178	180, 250	125	394	178	16
450	140	287	114	203	180, 250	136	432	189	18
500	146	327	127	229	250	153	483	213	20
550	166	367	140	254	250	175	533	240	23
600	176	406	152	254	250	191	559	260	25
700	205	464	178	279	–	217	635	298	30
750	224	503	191	279	–	235	660	321	32
800	241	546	210	305	–	255	724	346	34
850	250	584	222	330	–	273	775	368	36
925	267	635	241	356	–	292	838	400	38
1000	290	699	267	368	–	–	902	438	43
1100	314	741	286	406	–	–	978	470	44
1200	339	816	311	432	–	–	1054	514	50
1300	376	876	337	457	–	–	1130	556	52

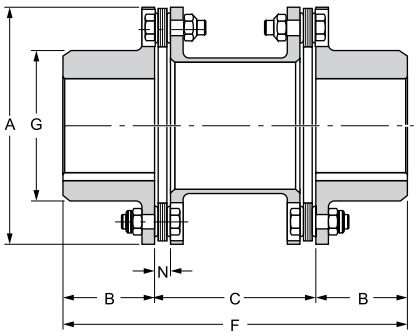

Taper Bores Also Available

Coupling Size	Max. Kilowatt Per 100 RPM	⑤ Max. RPM		Max. Continuous Torque (Nm)	Peak Overload Torque (Nm)	④ Weight (kg)	Weight Change Per mm of "C" (kg)	④ WR^2 ($kg\text{-}m^2$)	WR^2 Change Per mm of "C" ($kg\text{-}m^2$)	① Axial Capacity (mm)
	Service Factor 1.0	③ ⑤ Not Balanced	Balanced							
125	3.2	5,000	15,000	305	610	2.1	0.003	0.0022	0.00170	±0.91
162	6.3	4,600	15,000	604	1,208	3.3	0.004	0.0046	0.00310	±0.91
200	12.5	4,250	15,000	1,185	2,371	5.6	0.004	0.0128	0.00670	±0.91
225	20.7	4,100	14,000	1,976	3,951	7.3	0.006	0.0178	0.00980	±0.91
262	38.9	3,900	13,000	3,706	7,413	11.8	0.009	0.0401	0.0180	±1.09
312	60.8	3,450	11,700	5,803	11,605	18.8	0.012	0.0878	0.0360	±1.29
350	79.0	3,200	10,500	7,552	15,105	26.6	0.015	0.154	0.0550	±1.42
375	118.6	3,000	9,400	11,323	22,646	36.3	0.018	0.266	0.0830	±1.57
425	158.8	2,800	8,700	15,161	30,323	47.2	0.026	0.404	0.135	±1.70
450	178.2	2,700	8,100	16,979	33,958	57.7	0.026	0.576	0.156	±1.82
500	291.5	2,500	7,100	27,817	55,633	89.0	0.041	1.112	0.313	±2.02
550	390.7	2,300	6,300	37,300	74,599	127.6	0.052	2.019	0.495	±2.33
600	512.9	2,150	5,700	48,973	97,945	168.0	0.059	3.277	0.705	±2.59
700	798.5	1,950	5,000	76,180	152,359	257.4	0.082	6.525	1.19	±2.92
750	992.4	1,850	4,600	94,694	189,388	323.2	0.093	9.685	1.65	±3.17
800	1276.5	1,750	4,300	121,777	243,554	413.6	0.107	15.05	2.30	±3.45
850	1506.1	1,600	3,900	143,712	287,424	503.5	0.107	20.98	2.30	±3.65
925	2039.2	1,500	3,600	194,626	389,253	662.4	0.143	32.60	4.61	±3.96
1000	2306.9	–	3,250	220,140	440,280	853.5	0.161	50.30	5.83	±4,36
1100	2750.5	–	3,100	262,475	524,949	1021.5	0.197	68.91	9.15	±4,64
1200	3353.7	–	2,800	320,050	640,099	1366.5	0.268	110.16	13.78	±5,15
1300	4010.6	–	2,600	382,705	765,410	1661.6	0.268	153.23	15.55	±5,53

① All Thomas disc couplings meet NEMA frame sleeve bearing motor specifications without modification or the addition of end-float restricting devices.
② Additional "C" dimensions available. Consult Rexnord.
③ Series 52 couplings meet AGMA Class 9 balance requirements as manufactured with interference fit bore and close fit keyway. If clearance fit and/or setscrews are required, please consult Rexnord. See page 4 for explanation of RPM limits and balancing recommendations.
④ Weight and WR^2 at maximum bore and standard "C" dimension listed.
⑤ Balance recommendations based on AGMA Specification 9000-C90 Average Sensitivity.
⑥ Consult Rexnord for minimum rough bore sizes.

NOTE: Dimensions subject to change. Certified dimensions of ordered material furnished on request.

Rexnord Thomas Flexible Disc Couplings

Spacer Type Series 71 - SEE PAGES 12-13 FOR UPDATED VERSION WITH ENHANCED FEATURES

Series 71 couplings are designed for applications requiring a spacer-type coupling such as ANSI, API and other process pumps. Series 71 couplings are most commonly applied on motor, turbine, and gear driven pumps, compressors and blowers.

Series 71 is a simple three-piece design. Three piece design features unitized center member assembly and two piloted hubs. Hubs are piloted fit to the factory assembled center member. The piloting provides repeatable assembly of components for better dynamic balance characteristics. The center assembly simply "drops out" for fast installation or removal without special tools. The disc design allows for low flexing forces and high overload capacity.

Construction

Hubs and Center Assembly: Carbon steel
Bolts: Alloy steel
Disc Packs: Stainless steel for 4- & 6-bolt designs
Stainless steel Tpack for 8-bolt design
Coatings Available: Black oxide, zinc, cadmium
Other disc pack materials such as Monel and Inconel are available; please consult Rexnord.
Misalignment: 1/2° per disc pack for 4- and 6-bolt designs, 1/3° per disc pack for 8-bolt design

When specified, Series 71 couplings meet all requirements of API 610 or API 671.
If application requires API specification, please consult Rexnord.

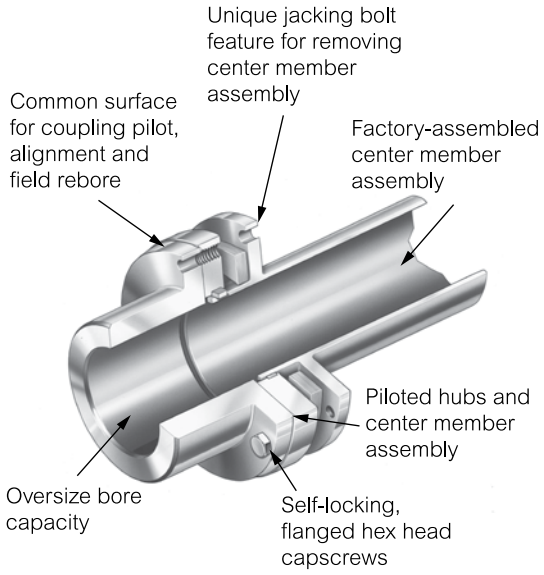

NOTE: These recommendations and balance classes are based on AGMA Specifications 9000-C90, high sensitivity. If conditions exist other than as defined in 9000-C90, for sensitivity, consult Rexnord. The above information should be used as a guide only. AGMA Class 9 balance is furnished as standard when Series 71 couplings are finished bored with interference fits.

Series 71 Balance Recommendations

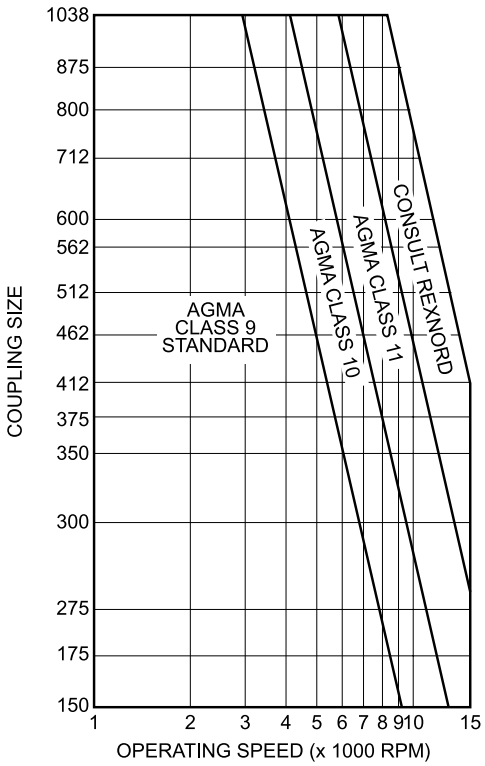

NOTE: Dimensions subject to change. Certified dimensions of ordered material furnished on request.

Rexnord Thomas Flexible Disc Couplings

Spacer Type Series 71 4-, 6- & 8-Bolt

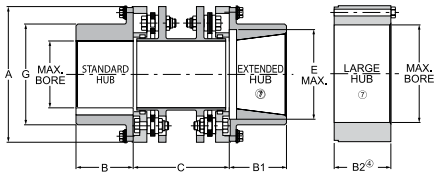

4- & 6-Bolt Design

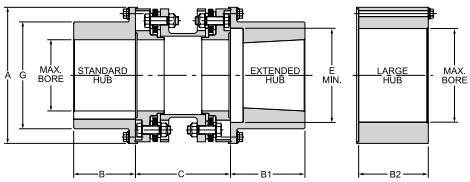

8-Bolt Design

General Dimensions (mm)

Coupling Size	⑥ B&B[1] Hub Max. Bore	⑥ B&B[2] Hub Max. Bore	A	B	B1	Std. B2	Std. C	Min. C	E	G
4-Bolt Design										
150	39	64	91	33	43	41	89	87	52	59
175	50	73	106	40	52	46	89	87	65	71
6-Bolt Design										
225	58	87	125	51	64	52	127	87	78	85
300	81	110	152	67	83	70	127	102	105	113
350	95	120	171	79	95	76	127	124	127	133
375	100	137	194	83	102	83	140	127	135	144
412	110	145	203	92	111	92	178	155	146	155
462	130	166	229	105	127	105	178	178	160	174
512	140	187	255	114	137	114	178	191	179	194
562	156	200	279	127	152	127	203	203	195	213
600	166	220	298	133	162	133	229	229	211	227
8-Bolt Design										
225-8	80	106	152	64	79	78	127	121	106	116
262-8	95	128	175	78	94	90	178	140	119	132
312-8	112	145	203	90	109	105	191	152	146	160
350-8	130	166	227	99	121	114	191	171	165	179
375-8	144	185	252	113	135	131	191	184	181	202
425-8	158	203	273	124	149	140	203	191	189	214
450-8	170	214	294	129	157	152	229	222	213	236
500-8	196	248	333	151	179	171	279	260	232	267
550-8	215	–	373	167	198	–	292	292	254	292
600-8	242	–	416	183	214	–	318	318	298	336
700-8	258	–	471	211	246	–	368	368	325	373
750-8	286	–	511	227	262	–	400	400	363	413

Coupling Size	Max. Kilowatt Per 100 RPM	④ Max. RPM		Max. Continuous Torque (Nm)	Peak Overload Torque (Nm)	② Weight (kg)	Weight Change Per mm of "C" (kg)	② WR^2 ($kg\text{-}m^2$)	WR^2 Change Per mm of "C" ($kg\text{-}m^2\text{-}m$)	① Axial Capacity (mm)
	Service Factor 1.0	⑤ Not Balanced	④ Balanced							
4-Bolt Design										
150	1.1	9,000	20,800	105	210	3.0	0.0018	0.0031	0.00035	±0.127
175	1.9	8,300	17,000	184	368	4.3	0.0025	0.0060	0.00104	±0.1778
6-Bolt Design										
225	3.6	7,700	16,000	345	691	6.4	0.0034	0.0123	0.00288	±0.1905
300	8.6	6,800	14,000	820	1,639	11.8	0.0046	0.0354	0.00760	±2.159
350	15.8	6,200	13,500	1,513	3,026	19.5	0.0075	0.0758	0.0136	±2.296
375	22.8	5,650	12,000	2,179	4,358	25.0	0.0077	0.1238	0.0187	±2.413
412	26.6	5,350	11,000	2,540	5,080	32.2	0.0107	0.1799	0.0334	±2.794
462	47.8	5,000	10,000	4,561	9,122	45.9	0.0143	0.3248	0.0536	±3.048
512	65.0	4,700	9,200	6,209	12,418	61.3	0.0186	0.5355	0.0856	±3.302
562	99.4	4,350	8,300	9,494	18,988	84.4	0.0229	0.8837	0.120	±3.683
600	108.4	4,150	7,800	10,352	20,704	103.5	0.0313	1.2436	0.202	±4.064
8-Bolt Design										
225-8	20.7	7,500	14,000	1,976	3,952	12.6	0.0068	0.0375	0.0123	±0.91
262-8	38.8	6,800	12,500	3,706	7,412	19.5	0.0082	0.0775	0.0225	±1.09
312-8	60.8	6,200	11,500	5,803	11,606	30.0	0.0098	0.1697	0.0385	±1.29
350-8	79.1	5,700	10,500	7,552	15,104	43.0	0.0134	0.3017	0.0649	±1.42
375-8	118.6	5,200	9,800	11,323	22,646	61.0	0.0188	0.5220	0.106	±1.57
425-8	158.8	5,000	9,300	15,161	30,322	77.0	0.0218	0.7654	0.145	±1.70
450-8	177.8	4,700	8,700	16,979	33,958	100.0	0.0284	1.1763	0.207	±1.82
500-8	291.3	4,200	7,900	27,817	55,634	155.0	0.0379	2.3525	0.362	±2.02
550-8	390.6	3,900	7,300	37,300	74,600	216.0	0.0474	4.0759	0.574	±2.34
600-8	512.9	3,600	6,800	48,973	97,946	296.0	0.0545	7.0604	0.796	±2.59
700-8	797.8	3,300	6,200	76,180	152,360	436.0	0.0738	13.1377	1.36	±2.92
750-8	991.7	3,100	5,800	94,694	189,388	564.0	0.0924	20.2538	2.02	±3.18

① All Thomas disc couplings meet NEMA frame sleeve bearing motor specifications without modifications or the addition of end-float restricting devices.

② Weight and WR^2 with standard length hubs, maximum bore and standard "C".

③ Extended hub length is designed longer in order to include a counter-bore for the threaded extension on a tapered shaft.

④ See page 4 for explanation of RPM limits and balancing recommendations.

⑤ Series 71 Coupling assembly meets AGMA Class 9 Balance when finish bored with interference fits.

⑥ Consult Rexnord for minimum rough bore sizes.

⑦ If a block hub is supplied, extra capscrews will be provided for center member jacking feature.

NOTE: Dimensions subject to change. Certified dimensions of ordered material furnished on request.

Recommended Hub Bores for Clearance & Interference Fit on Keyed Shafting

	Shaft Diameter	Clearance Fit		Transitional Fit		Interference Fit	
		Hub Bore	Fit*	Hub Bore	Fit*	Hub Bore	Fit*
	j6	F7	+.008	H7	-.008	M6	-.023
MM	+.008/-.003	+.016/+.034	+.037	+.000/+.018	+.021	-.015/-.004	-.001
12	12.008/11.997	12.016/12.034		12.000/12.018		11.985/11.996	
14	14.008/13.997	14.016/14.034		14.000/14.018		13.985/13.996	
16	16.008/15.997	16.016/16.034		16.000/16.018		15.985/15.996	
18	18.008/17.997	18.016/18.034		18.000/18.018		17.985/17.996	
	j6	F7	+.011	H7	-.009	M6	-.026
MM	+.009/-.004	+.020/-.041	+.045	+.000/+.021	+.025	-.017/-.004	+.000
19	19.009/18.996	19.020/19.041		19.020/19.041		18.983/18.996	
20	20.009/19.996	20.020/20.041		20.020/20.041		20.983/20.996	
22	22.009/21.996	22.020/22.041		22.020/22.041		21.983/21.996	
24	24.009/23.996	24.020/24.041		24.020/24.041		23.983/23.996	
25	25.009/24.996	25.020/25.041		25.020/25.041		24.983/24.996	
28	28.009/27.996	28.020/28.041		28.020/28.041		27.983/27.996	
30	30.009/29.996	30.020/30.041		30.020/30.041		29.983/29.996	
>30	k6	F7	+.007	H7	-.018	K6	-.031
MM	+.018/+.002	+.025/+.050	+.048	+.000/+.025	+.023	-.013/+.003	+.001
32	32.018/32.002	32.025/32.050		32.000/32.025		31.987/32.003	
35	35.018/35.002	35.025/35.050		35.000/35.025		34.987/35.003	
38	38.018/38.002	38.025/38.050		38.000/38.025		37.987/38.003	
40	40.018/40.002	40.025/40.050		40.000/40.025		39.987/40.003	
42	42.018/42.002	42.025/42.050		42.000/42.025		41.987/42.003	
45	45.018/45.002	45.025/45.050		45.000/45.025		44.987/45.003	
48	48.018/48.002	48.025/48.050		48.000/48.025		47.987/48.003	
50	50.018/50.002	50.025/50.050		50.000/50.025		49.987/50.003	
>50	m6	F7	+.000	H7	-.030	K7	-.051
MM	+.030/+.011	+.030/+.060	+.049	+.000/+.030	+.019	-.021/+.009	-.002
55	55.030/55.011	55.030/55.060		55.000/55.030		54.975/55.009	
56	56.030/56.011	56.030/56.060		56.000/56.030		55.975/56.009	
60	60.030/60.011	60.030/60.060		60.000/60.030		59.975/60.009	
63	63.030/63.011	63.030/63.060		63.000/63.030		62.975/63.009	
65	65.030/65.011	65.030/65.060		65.000/65.030		64.975/65.009	
70	70.030/70.011	70.030/70.060		70.000/70.030		69.975/70.009	
71	71.030/71.011	71.030/71.060		71.000/71.030		70.975/71.009	
75	75.030/75.011	75.030/75.060		75.000/75.030		74.975/75.009	
80	80.030/80.011	80.030/80.060		80.000/80.030		79.975/80.009	
>80	m6	F7	+.001	H7	-.035	M7	-.070
MM	+.035/+.013	+.036/+.071	+.058	+.000/+.035	+.022	-.035/+.000	-.013
85	85.035/85.013	85.036/85.071		85.000/85.035		84.965/85.000	
90	90.035/90.013	90.036/90.071		90.000/90.035		89.965/90.000	
95	95.035/95.013	95.036/95.071		95.000/95.035		94.965/55.000	
100	100.035/100.013	100.036/100.071		100.000/100.035		99.965/100.000	
>100	m6	F7		H7		P7	-.094
MM	+.035/+.013	+.036/+.071		+.000/+.035		-.059/-.024	-.037
110	110.035/110.013	110.036/110.071		110.000/100.035		109.941/109.976	
120	120.035/120.013	120.036/120.071		120.000/120.035		119.941/119.976	
>120	m6	F7	+.003	H7	-.040	P7	-.108
MM	+.040/+.015	+.043/+.083	+.068	+.000/+.040	+.025	-.068/-.028	-.043
125	125.040/125.015	125.043/125.083		125.000/125.040		124.932/124.972	
130	130.040/130.015	130.043/130.083		130.000/130.040		129.932/129.972	
140	140.040/140.015	140.043/140.083		140.000/140.040		139.932/139.972	
150	150.040/150.015	150.043/150.083		150.000/150.040		149.932/149.972	
160	160.040/160.015	160.043/160.083		160.000/160.040		159.932/159.972	
170	170.040/170.015	170.043/170.083		170.000/170.040		169.932/169.972	
180	180.040/180.015	180.043/180.083		180.000/180.040		179.932/179.972	

	Shaft Diameter	Clearance Fit		Transitional Fit		Interference Fit	
		Hub Bore	Fit*	Hub Bore	Fit*	Hub Bore	Fit*
>180	m6	F7	+.004	H7	-.046	P7	.125
MM	+.046/+.017	+.050/+.096	+.079	+.000/+.046	+.029	-.079/-.033	-.050
190	190.046/190.017	190.050/190.096		190.000/190.046		189.921/189.967	
200	200.046/200.017	200.050/200.096		200.000/200.046		199.921/199.967	
>200	m6	F7		H7		R7	-.155
MM	+.046/+.017	+.050/+.096		+.000/+.046		-.109/-.063	-.080
210	210.046/210.017	210.050/210.096		210.000/210.046		209.891/209.937	
220	220.046/220.017	220.050/220.096		220.000/220.046		219.891/219.937	
225	225.046/225.017	225.050/220.096		225.000/225.046		224.891/224.937	
>225	m6	F7		H7		R7	-.159
MM	+.046/+.017	+.050/+.096		+.000/+.046		-.113/-.067	-.084
230	230.046/230.017	230.050/230.096		230.000/230.046		229.887/229.933	
240	240.046/240.017	240.050/240.096		240.000/240.046		239.887/239.933	
250	250.046/250.017	250.050/250.096		250.000/250.046		249.887/249.933	
>250	m6	F7	+.004	H7	-.052	R7	-.178
MM	+.052/+.020	+.056/+.108	+.088	+.000/+.052	+.032	-.126/-.074	-.094
260	260.052/260.020	260.056/260.108		260.000/260.052		259.874/259.926	
270	270.052/270.020	270.056/270.108		270.000/270.052		269.874/269.926	
280	280.052/280.020	280.056/280.108		280.000/280.052		279.874/279.926	
>280	m6	F7		H7		R7	-.182
MM	+.052/+.020	+.056/+.108		+.000/+.052		-.130/-.078	-.098
290	290.052/290.020	290.056/290.108		290.000/290.052		289.870/289.922	
300	300.052/300.020	300.056/300.108		300.000/300.052		299.870/299.922	
310	310.052/310.020	310.056/310.108		310.000/310.052		309.870/309.922	
315	315.052/315.020	315.056/310.108		315.000/315.052		314.870/314.922	
>315	m6	F7	+.005	H7	-.057	R7	-.201
MM	+.057/+.021	+.062/+.119	+.098	+.000/+.057	+.036	-.144/-.187	-.108
320	320.057/320.021	320.062/320.119		320.000/320.057		319.856/319.813	
330	330.057/330.021	330.062/330.119		330.000/330.057		329.856/329.813	
340	340.057/340.021	340.062/340.119		340.000/340.057		339.856/339.813	
350	350.057/350.021	350.062/350.119		350.000/350.057		349.856/349.813	
355	355.057/355.021	355.062/355.119		355.000/355.057		354.856/354.813	
>355	m6	F7		H7		R8	-.260
MM	+.057/+.021	+.062/+.119		+.000/+.057		-.203/-.114	-.135
360	360.057/360.021	360.062/360.119		360.000/360.057		359.797/359.886	
370	370.057/370.021	370.062/370.119		370.000/370.057		369.797/369.886	
380	380.057/380.021	380.062/380.119		380.000/380.057		379.797/379.886	
390	390.057/390.021	390.062/390.119		390.000/390.057		389.797/389.886	
400	400.057/400.021	400.062/400.119		400.000/400.057		399.797/399.886	
>400	m6	F7	+.005	H7	-.063	R8	-.286
MM	+.063/+.023	+.068/+.131	+.108	+.000/+.063	+.040	-.223/-.126	-.149
410	410.063/410.023	410.068/410.131		410.000/410.063		409.777/409.874	
420	420.063/420.023	420.068/420.131		420.000/420.063		419.777/419.874	
430	430.063/430.023	430.068/430.131		430.000/430.063		429.777/429.874	
440	440.063/440.023	440.068/440.131		440.000/440.063		439.777/439.874	
450	450.063/450.023	450.068/450.131		450.000/450.063		449.777/449.874	
>450	m6	F7		H7		R8	-.292
MM	+.063/+.023	+.068/+.131		+.000/+.063		-.229/-.132	-.155
460	460.063/460.023	460.068/460.131		460.000/460.063		459.771/459.868	
470	470.063/470.023	470.068/470.131		470.000/470.063		469.771/469.868	
480	480.063/480.023	480.068/480.131		480.000/480.063		479.771/479.868	
490	490.063/490.023	490.068/490.131		490.000/490.063		489.771/489.868	
500	500.063/500.023	500.068/500.131		500.000/500.063		499.771/499.868	

NOTE: Consult Rexnord for all keyless bore fits.

Taper-Lock and Q.D. Bushing Selection Cross Reference

In order to cross reference tapered bushing and bore sizes to a coupling selection, the following tables will cover the majority of cases.

Hubs bored for Q.D. or Taper-Lock® bushings will be modified for proper fit with bushing length. Consult Rexnord for specific dimensional data.

If specific reference to the coupling series or type is not found in the table, i.e. special designs, comparison of the shaft size with the maximum bore table only, will indicate the correct taper bushing in the left side of each table. Other flange style and compression bushings can be used with coupling hubs.

Taper-Lock Type

Bushing Size	Coupling Size and Type					
	Max. Bore	DBZ	SV, SF, SN	Series 52	Series 54RDG	AMR, BMR, CMR, ST
1108	28	126	125	125	162	162
1215	32	163	162	162	200	200
1310	35	201	200	200	200	200
1610	41	201	200	200	200	200
1615	41	201	200	200	225	200
2012	51	226	226	225	262	262
2517	63	263	262	262	312	312
2525	63	263	262	262	312	262
3020	76	351	350	350	375	375
3030	76	351	312	312	350	350
3535	89	401	375	375	450	425

NOTE: "C" Dimension will be as listed for all couplings; "F" Dimension will vary according to bushing selection; Consult Rexnord for "F" dimensions and bushings.

Q.D. Type

① Bushing Size	Coupling Size and Type						
	Max. Bore	DBZ	SV, SF, SN	Series 52	Series 54RDG	Series 71	AMR, BMR, CMR, ST
JA	30	126	125	125	162	150	162
SH	35	163	162	200	200	175	200
SDS	42	201	226	225	225	300	200
SD	42	201	226	225	225	300	200
SK	55	263	262	262	312	300	262
SF	63	301	312	350	350	350	312
E	75	401	375	375	425	462	375
F	90	–	450	450	500	512	450

① With shallow keyway. Key supplied with bushing where shallow keyway is furnished.

Rexnord Thomas Couplings

Customized Flexible Disc Couplings Designs

The following pages illustrate a sampling of the special disc coupling products designed and manufactured by Rexnord for applications requiring special coupling designs; please contact your Rexnord representative.

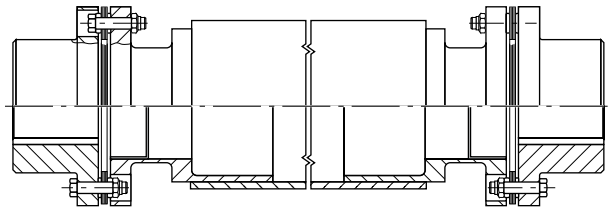

SN-EL – Extra Long Span

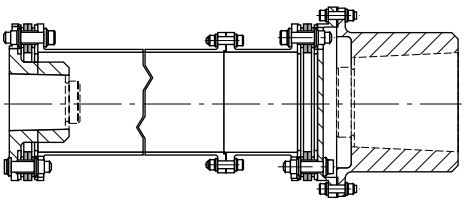

Semi-Reduced Movement – Bolt On Hub

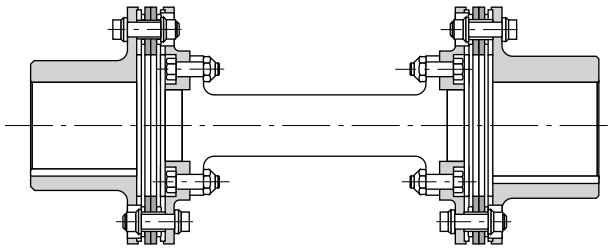

Torsionally Tuned Center Members

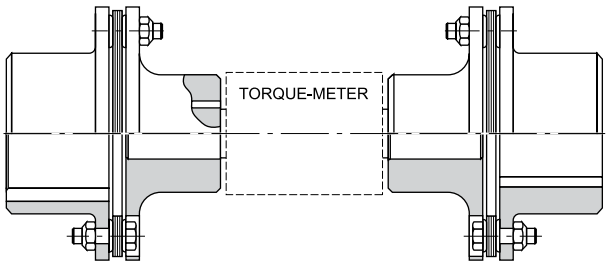

Torque Meter Coupling

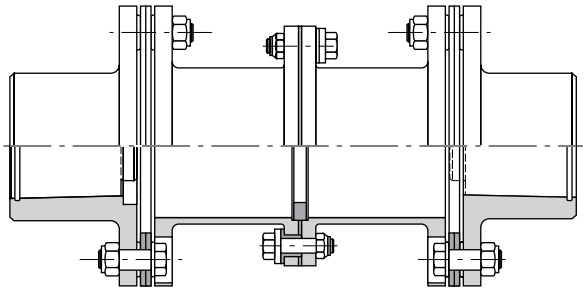

Electrically Insulated Couplings

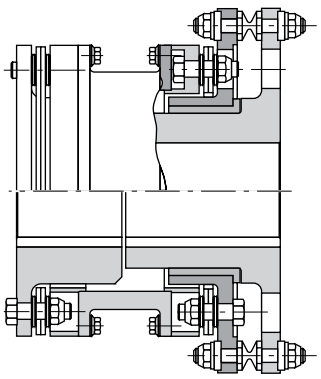

Breaker Pin Coupling – Bushing Style

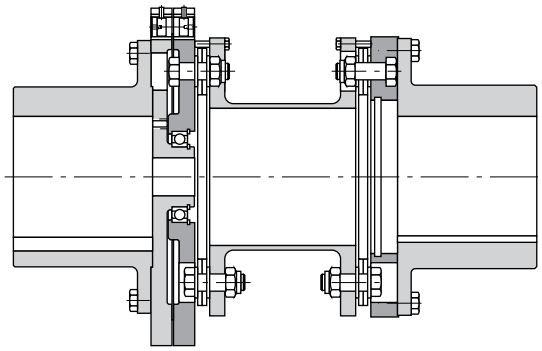

Breaker Pin Coupling – Bearing Style

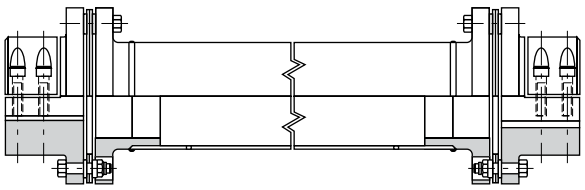

Clamp Hub Mounting

Customized Flexible Disc Couplings Designs

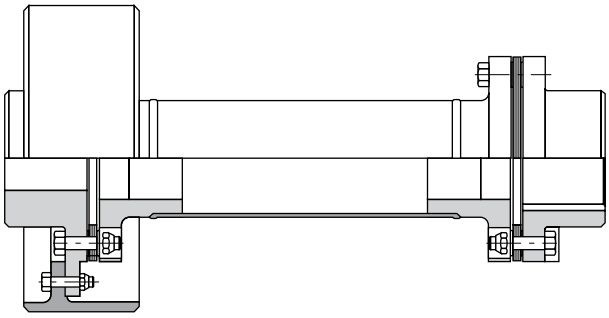

Brake Drum Hub

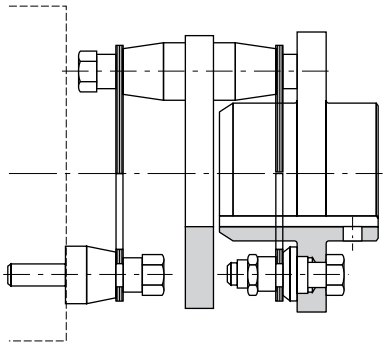

Motor-Tachometer Coupling

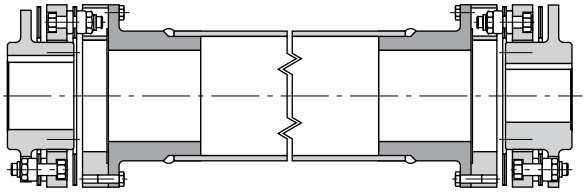

Double Disc Packs

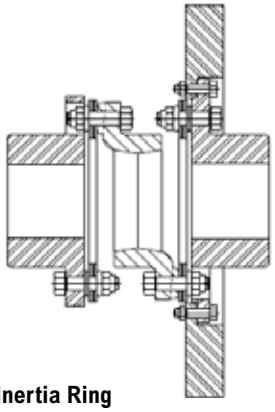

AMR Bolt-On Inertia Ring

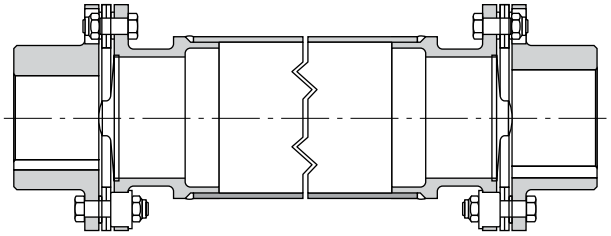

Axial Limiting Stops

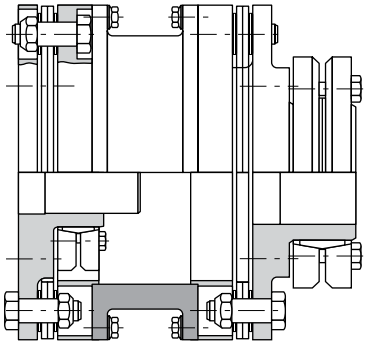

Shrink Disc Hub Mounting

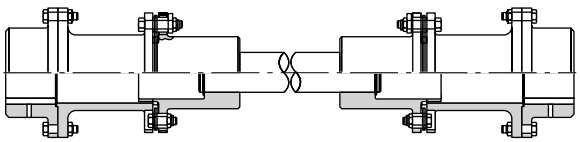

Slide Coupling

Notes

866-REXNORD/866-739-6673 (Within the U.S.)
414-643-2366 (Outside the U.S.)
www.rexnord.com

Why Choose Rexnord?

When it comes to providing highly engineered products that improve productivity and efficiency for industrial applications worldwide, Rexnord is the most reliable in the industry. Commitment to customer satisfaction and superior value extend across every business function.

Delivering Lowest Total Cost of Ownership

The highest quality products are designed to help prevent equipment downtime and increase productivity and dependable operation.

Valuable Expertise

An extensive product offering is accompanied by global sales specialists, customer service and maintenance support teams, available anytime.

Solutions to Enhance Ease of Doing Business

Commitment to operational excellence ensures the right products at the right place at the right time.

REXNORD

Rexnord Company Overview

Rexnord is a growth-oriented, multi-platform industrial company with leading market shares and highly trusted brands that serve a diverse array of global end markets.

Process & Motion Control

The Rexnord Process & Motion Control platform designs, manufactures, markets and services specified, highly engineered mechanical components used within complex systems where our customers' reliability requirements and the cost of failure or downtime are extremely high.

Water Management

The Rexnord Water Management platform designs, procures, manufactures and markets products that provide and enhance water quality, safety, flow control and conservation.

©2016 Rexnord
2000M 02/16