Single-function safety modules selection table

Product code	Supply voltage	For applications up to			Output contacts			Housing dimensions
		PL	SIL	Safety category	instantaneous	delayed	feedback	
Safety modules for emergency stop and gate monitoring								
CS AR-01	24 Vac/dc; 120 Vac; 230 Vac: 10...30 Vdc	e	3	4	**2 NO + 1 NC**	-	-	22,5 x 114 mm
CS AR-02	24 Vac/dc; 120 Vac; 230 Vac: 10...30 Vdc	e	3	4	**3 NO**	-	-	22,5 x 114 mm
CS AR-04	24 Vac/dc; 120 Vac; 230 Vac	e	3	4	**3 NO + 1 NC**	-	-	22,5 x 114 mm
CS AR-05	24 Vac/dc; 120 Vac; 230 Vac	e	3	4	**3 NO + 1 NC**	-	-	22,5 x 114 mm
CS AR-06	24 Vac/dc; 120 Vac; 230 Vac	e	3	4	**3 NO + 1 NC**	-	-	22,5 x 114 mm
CS AR-07	24 Vac/dc	e	3	4	**4 NO + 1 NC**	-	-	22,5 x 129 mm
CS AR-08	12 Vdc, 24 Vac/dc; 120 Vac; 230 Vac	e	3	4	**2 NO**	-	-	22,5 x 114 mm
CS AR-20	24 Vac/dc; 120 Vac; 230 Vac	e	3	3	**2 NO**	-	-	22,5 x 114 mm
CS AR-21	24 Vac/dc; 120 Vac; 230 Vac	e	3	3	**2 NO**	-	-	22,5 x 114 mm
CS AR-22	24 Vac/dc; 120 Vac; 230 Vac	e	3	3	**3 NO + 1 NC**	-	-	22,5 x 114 mm
CS AR-23	24 Vac/dc; 120 Vac; 230 Vac	e	3	3	**3 NO + 1 NC**	-	-	22,5 x 114 mm
CS AR-24	24 Vac/dc	e	3	3	**4 NO + 1 NC**	-	-	22,5 x 114 mm
CS AR-25	24 Vac/dc	e	3	3	**4 NO + 1 NC**	-	-	22,5 x 114 mm
CS AR-40	24 Vac/dc	d	2	2	**2 NO**	-	-	22,5 x 91 mm
CS AR-41	24 Vac/dc	d	2	2	**2 NO**	-	-	22,5 x 91 mm
CS AR-46	24 Vac/dc	c	1	1	**1 NO**	-	-	22,5 x 91 mm
CS AR-91	24 Vac/dc	e	3	4	**2 NO+1 PNP**	-	-	22,5 x 114 mm
Module for emergency stop, gate monitoring, safety mats and safety bumpers with 4-wire technology								
CS AR-51	24 Vac/dc	e	3	4	**2 NO**	-	-	22,5 x 114 mm
Safety modules for emergency stop and gate monitoring with delayed contacts at the opening of the input channels								
CS AT-0③	24 Vac/dc; 120 Vac; 230 Vac	e	3	4 (②)	**2 NO + 1 NC**	**2 NO**	-	45 x 114 mm
CS AT-1③	24 Vac/dc; 120 Vac; 230 Vac	e	3	4 (②)	**3 NO**	**2 NO**	-	45 x 114 mm
CS AT-3③	24 Vac/dc	e	3	4 (②)	**2 NO**	**1 NO**	-	45 x 114 mm
Safety timer modules								
CS FS-1③	24 Vac/dc; 120 Vac; 230 Vac	①	①	①	-	**1 NO + 2 NC**	-	45 x 114 mm
CS FS-2③	24 Vdc; 120 Vac	d	2	3	-	**1 NO +1 NC +1 CO**	-	45 x 114 mm
CS FS-3③	24 Vdc; 120 Vac	d	2	3	-	**1 NO +1 NC +1 CO**	-	45 x 114 mm
CS FS-5③	24 Vdc; 120 Vac	d	2	3	-	**1 NO +1 NC +1 CO**	-	45 x 114 mm
Safety modules for two-hand controls or synchronism monitoring								
CS DM-01	24 Vac/dc; 120 Vac; 230 Vac	III C acc. to. EN 574			**3 NO + 1 NC**	-	-	22,5 x 114 mm
CS DM-02	24 Vac/dc; 120 Vac; 230 Vac	III C acc. to. EN 574			**2 NO**	-	-	22,5 x 114 mm
CS DM-20	24 Vac/dc; 120 Vac; 230 Vac	III A acc. to. EN 574			**2 NO**	-	-	22,5 x 114 mm
Standstill monitor safety module								
CS AM-0	24 ... 230 Vac/dc	d	2	3	**2 NO + 1 NC**	-	-	45 x 114 mm
Expansion modules with instantaneous contacts or delayed contacts at de-energizing								
CS ME-01	24 Vac/dc	①	①	①	**5 NO + 1 NC**	-	**1 NC**	22,5 x 114 mm
CS ME-02	24 Vdc	①	①	①	**4 NO + 2 NC**		**1 NC**	22,5 x 114 mm
CS ME-03	24 Vdc	①	①	①	**3 NO**	-	**1 NC**	22,5 x 91 mm
CS ME-20VU24-⑤	24 Vdc	①	①	①	-	**4 NO + 2 NC**	**1 NC**	22,5 x 114 mm
CS ME-30VU24-⑥	24 Vdc	①	①	①	-	**4 NO + 2 NC**	**1 NC**	45 x 114 mm
CS ME-31VU24-TS12	24 Vdc	①	①	①	-	**4 NO + 2 NC**	**1 NC**	45 x 114 mm

■ Available with this product
- Not available with this product
① Dependent from the base module
② Safety category 4 for instantaneous contacts, category 3 for delayed contacts

③ Delayed contacts releasing time
0 fixed time
1 from 0.3 to 3 s, step 0.3 s
2 adjustable from 1 to 10 s, 1 s step
3 adjustable from 3 to 30 s, step 3 s
4 adjustable from 30 to 300 s, step 30 s

④ Connection type
V screw terminals
M connector with screw terminals
X connector with spring terminals

⑤ Releasing time in absence of power supply
TF0.5 0.5 s fixed time
TF1 1 s fixed time
TF2 2 s fixed time
TF3 3 s fixed time

Product code	Autom. and manual start	Monitored start	Inputs with opposite potentials	Equipo-tential inputs	Parallel start (24 Vdc only)	Input type ⑦				Connection type ④			Page
										V	M	X	
CS AR-01	■	■	■	-	■	■	-	⑧	-	■	■	■	183
CS AR-02	■	■	■	-	■	■	-	⑧	-	■	■	■	185
CS AR-04	■	■	■	-	■	■	-	⑧	-	■	■	■	187
CS AR-05	■	-	■	■	■	■	■	■	-	■	■	■	189
CS AR-06	-	■	■	■	■	■	■	■	-	■	■	■	189
CS AR-07	■	■	■	-	■	■	-	-	-	-	■	■	191
CS AR-08	■	■	■	■	■	■	■	■	-	■	■	■	193
CS AR-20	■	-	-	-	-	■	-	-	-	■	■	■	195
CS AR-21	-	■	-	-	-	■	-	-	-	■	■	■	195
CS AR-22	■	-	-	-	-	■	-	-	-	■	■	■	197
CS AR-23	-	■	-	-	-	■	-	-	-	■	■	■	197
CS AR-24	■	-	-	-	-	■	-	-	-	■	■	■	199
CS AR-25	-	■	-	-	-	■	-	-	-	■	■	■	199
CS AR-40	■	-	-	-	-	■	-	-	-	■	■	■	201
CS AR-41	-	■	-	-	-	■	-	-	-	■	■	■	201
CS AR-46	■	-	■	-	-	■	-	■	-	■	■	■	203
CS AR-91	■	■	■	-	■	■	-	■	-	■	■	■	205
CS AR-51	■	■	■	-	--	■	-	-	■	■	■	■	207
CS AT-0③	■	■	■	■	■	■	■	■	-	■	■	■	209
CS AT-1③	■	■	■	■	■	■	■	■	-	■	■	■	211
CS AT-3③	■	■	■	-	-	■	-	■	-	■	■	■	213
CS FS-1③	-	-	-	-	-	■	-	-	-	■	■	■	215
CS FS-2③	-	-	-	-	-	■	-	-	-	■	■	■	217
CS FS-3③	-	-	-	-	-	■	-	-	-	■	■	■	219
CS FS-5③	■	■	-	■	-	■	-	■	-	■	■	■	221
CS DM-01	-	-	■	-	-	■	-	-	-	■	■	■	223
CS DM-02	-	-	■	-	-	■	-	-	-	■	■	■	225
CS DM-20	-	-	■	-	-	■	-	-	-	■	■	■	227
CS AM-01	-	-	-	-	-	■	-	-	-	■	■	■	229
CS ME-01	-	-	①	①	-	■	-	-	-	■	■	■	231
CS ME-02	-	-	①	①	-	■	-	-	-	■	■	■	233
CS ME-03	-	-	-	■	-	■	■	-	-	■	■	■	235
CS ME-20VU24-⑤	-	-	①	①	-	■	-	-	-	■	■	■	237
CS ME-30VU24-⑥	-	-	①	①	-	■	-	-	-	■	■	■	239
CS ME-31VU24-TS12	-	-	①	①	-	■	-	-	-	■	■	■	239

⑥ Releasing time in absence of power supply

TF1	1 s fixed time
...	.....
TF12	12 s fixed time

⑦ Input type

- Electromechanical contacts
- solid state output circuits (e.g. light curtains)
- magnetic safety sensors
- safety mats and bumpers with 4-wire technology

⑧ Modules compatible with magnetic sensors, starting June 2014

Safety module **CS AR-01**

Module for emergency stop, gate monitoring and magnetic safety sensors

Main features
- For safety applications up to SIL CL 3/PL e
- Input with 1 or 2 channels
- Choice between automatic start, manual start or monitored start
- Connection of the input channels to opposite potentials
- Small 22.5 mm housing
- Output contacts:
  2 NO safety contacts,
  1 NC auxiliary contact
- Supply voltage:
  10 ... 30 Vdc, 24 Vac/dc, 120 Vac, 230 Vac

Utilization categories
Alternating current: AC15 (50...60 Hz)
Ue (V) 230
Ie (A) 3
Direct current: DC13 (6 op. cycles/minute)
Ue (V) 24
Ie (A) 4

Markings, quality marks and certificates:

UL approval:	E131787
EC type examination certificate:	IMQ CP 432 DM
EAC approval:	RU C-IT ДМ94.В.01024
CCC approval:	2013010305640211

In conformity with the requirements of:
Low Voltage Directive 2006/95/EC,
Machinery Directive 2006/42/EC,
EMC Directive 2004/108/EC

Technical data

Housing
PA 6.6 polyamide housing, self-extinguishing, V0 acc. to UL 94

Protection degree:	IP40 (housing), IP20 (terminal strip)
Dimensions:	see page 283, design A

General data

SIL CL:	up to SIL CL 3 acc. to EN 62061
Performance Level (PL):	up to PL e acc. to EN ISO 13849-1
Safety category:	up to cat. 4 acc. to EN ISO 13849-1
Safety parameters:	see page 333
Ambient temperature:	-25°C...+55°C
Mechanical endurance:	>10 million operating cycles
Electrical endurance:	>100,000 operating cycles
Pollution degree:	external 3, internal 2
Impulse voltage (Uimp):	4 kV
Rated insulation voltage (Ui):	250 V
Overvoltage category:	II
Weight:	0.3 kg

Supply

Rated supply voltage (Un):	10 … 30 Vdc 24 Vac/dc; 50...60 Hz 120 Vac; 50…60 Hz 230 Vac; 50…60 Hz
DC maximum residual ripple:	10%
Supply voltage tolerance:	±15% of Un
AC consumption:	< 5 VA
DC consumption:	< 2 W

Control circuit

Protection against short circuits:	resistance PTC, Ih=0.5 A
PTC timing:	intervention > 100 ms, reset > 3 s
Maximum input resistance:	≤ 50 Ω
Input current:	< 30 mA
Min. duration of start impulse t_{MIN}:	> 100 ms
Operating time t_A:	< 50 ms
Releasing time t_{R1}:	< 20 ms
Releasing time in absence of power supply t_R:	< 70 ms
Simultaneity time t_C:	infinite

In conformity with standards:
EN 60204-1, EN ISO 13855, EN 1037, EN ISO 12100, EN ISO 13850, EN 60529, EN 61000-6-2, EN 61000-6-3, EN 62326-1, EN 60664-1, EN 60947-1, EN ISO 13849-1, EN ISO 13849-2, EN 62061, UL 508, CSA C22.2 n° 14-95

Output circuit

Output contacts:	2 NO safety contacts, 1 NC auxiliary contact
Contact type:	forcibly guided
Contact material:	gold-plated silver alloy
Maximum switching voltage:	230/240 Vac; 300 Vdc
Max. current per contact:	6 A
Conventional free air thermal current Ith:	6 A
Max. total current Σ Ith^2:	72 A^2
Minimum current:	10 mA
Contact resistance:	≤ 100 mΩ
External protection fuse:	4 A

The number and the load capacity of output contacts can be increased by using expansion modules or contactors. See pages 231-240.

Code structure

CS AR-01V024

Connection type	
V	screw terminals
M	connector with screw terminals
X	connector with spring terminals

Supply voltage		
024	24 Vac/dc	±15%
120	120 Vac	±15%
230	230 Vac	±15%
E02	10 ... 30 Vdc	

Stock items

CS AR-01V024

Characteristics approved by UL

Rated supply voltage (Un):	24 Vac/dc; 50...60 Hz 120 Vac; 50…60 Hz 230 Vac; 50…60 Hz
AC consumption:	< 5 VA
DC consumption:	< 2 W
Maximum switching voltage:	230 Vac
Max. current per contact:	6 A
Utilization category	C300

Notes:
- Use 60° or 75 °C copper (Cu) conductor, rigid or flexible, wire size AWG 30-12.
- Terminal tightening torque of 5-7 Lb In.
- Only for 24 Vac/dc version, supply from remote class 2 source or limited voltage and limited energy. (Supply from Remote Class 2 Source or limited voltage limited energy).

Safety module CS AR-01

Terminal layout

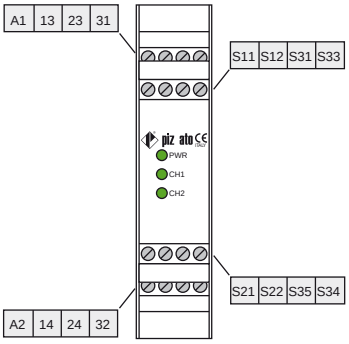

Operation diagrams

Configuration with automatic start

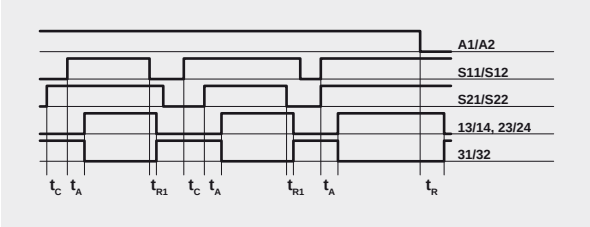

Configuration with monitored start

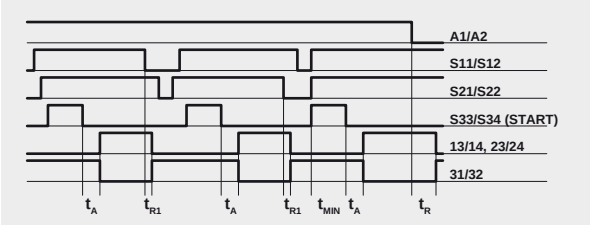

Configuration with manual start

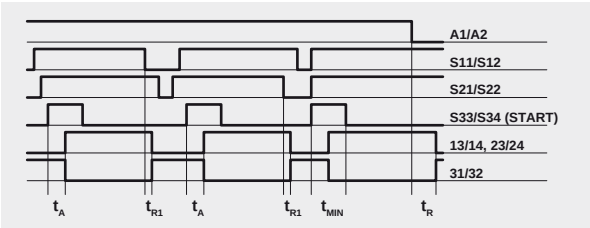

Legend:

t_{MIN}: Min. duration of start impulse
tC: simultaneity time
t_A: operating time
t_{R1}: releasing time
t_R: releasing time in absence of power supply

Notes:
The configurations with one channel are obtained taking into consideration only the S11/S12 input. In this case it is necessary to consider time t_{R1} referred to input S11/S12, time t_R referred to the supply, time t_A referred to input S11/S12 and to the start, and time t_{MIN} referred to the start.

Internal diagram

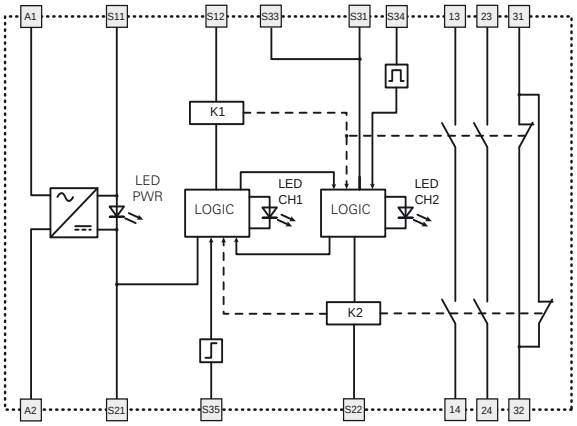

Input configuration

Emergency stop circuits	
Input configuration with manual start	
1 channel	2 channels

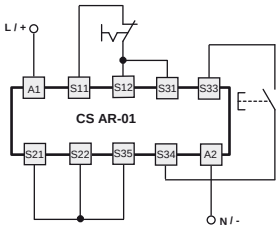

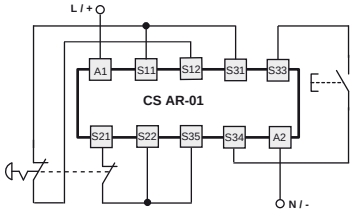

The diagram does not show the exact position of terminals in the product

Automatic start

With regard to the indicated diagrams, bridge the start button between S33 and S34 in order to activate the automatic start module.

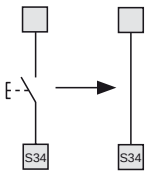

Monitored start

With regard to the indicated diagrams, it is necessary to remove the connection between S22 and S35 in order to activate the monitored start module.

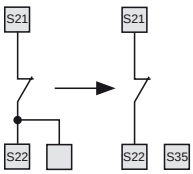

Movable guard monitoring and magnetic safety sensors

The safety module can control emergency stop circuits, movable guard monitoring circuits or magnetic safety sensors. Replace the emergency stop contacts with switch contacts or sensor contacts.
The sensors can only be used in 2-channel configuration.

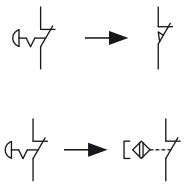

Application examples See page 241

Safety module **CS AR-02**

Module for emergency stop, gate monitoring and magnetic safety sensors

Main features
- For safety applications up to SIL CL 3/PL e
- Input with 1 or 2 channels
- Choice between automatic start, manual start or monitored start
- Connection of the input channels to opposite potentials
- Small 22.5 mm housing
- Output contacts: 3 NO safety contacts
- Supply voltage: 10 ... 30 Vdc, 24 Vac/dc, 120 Vac, 230 Vac

Utilization categories
Alternating current: AC15 (50...60 Hz)
Ue (V) 230
Ie (A) 3
Direct current: DC13 (6 op. cycles/minute)
Ue (V) 24
Ie (A) 4

Markings, quality marks and certificates:

UL approval:	E131787
EC type examination certificate:	IMQ CP 432 DM
EAC approval:	RU C-IT ДМ94.В.01024
CCC approval:	2013010305640211

In conformity with the requirements of:
Low Voltage Directive 2006/95/EC,
Machinery Directive 2006/42/EC,
EMC Directive 2004/108/EC

Technical data

Housing
PA 6.6 polyamide housing, self-extinguishing, V0 acc. to UL 94

Protection degree:	IP40 (housing), IP20 (terminal strip)
Dimensions:	see page 283, design A

General data

SIL CL:	up to SIL CL 3 acc. to EN 62061
Performance Level (PL):	up to PL e acc. to EN ISO 13849-1
Safety category:	up to cat. 4 acc. to EN ISO 13849-1
Safety parameters:	see page 333
Ambient temperature:	-25°C...+55°C
Mechanical endurance:	>10 million operating cycles
Electrical endurance:	>100,000 operating cycles
Pollution degree:	external 3, internal 2
Impulse voltage (Uimp):	4 kV
Rated insulation voltage (Ui):	250 V
Overvoltage category:	II
Weight:	0.3 kg

Supply

Rated supply voltage (Un):	10 ... 30 Vdc 24 Vac/dc; 50...60 Hz 120 Vac; 50…60 Hz 230 Vac; 50…60 Hz
DC maximum residual ripple:	10%
Supply voltage tolerance:	±15% of Un
AC consumption:	< 5 VA
DC consumption:	< 2 W

Control circuit

Protection against short circuits:	resistance PTC, Ih=0.5 A
PTC timing:	intervention > 100 ms, reset > 3 s
Maximum input resistance:	≤ 50 Ω
Input current:	< 30 mA
Min. duration of start impulse t_{MIN}:	> 100 ms
Operating time t_A:	< 50 ms
Releasing time t_{R1}:	< 20 ms
Releasing time in absence of power supply t_R:	< 70 ms
Simultaneity time t_C:	infinite

In conformity with standards:
EN 60204-1, EN ISO 13855, EN 1037, EN ISO 12100, EN ISO 13850, EN 60529, EN 61000-6-2, EN 61000-6-3, EN 62326-1, EN 60664-1, EN 60947-1, EN ISO 13849-1, EN ISO 13849-2, EN 62061, UL 508, CSA C22.2 n° 14-95

Output circuit

Output contacts:	3 NO safety contacts,
Contact type:	forcibly guided
Contact material:	gold-plated silver alloy
Maximum switching voltage:	230/240 Vac; 300 Vdc
Max. current per contact:	6 A
Conventional free air thermal current Ith:	6 A
Max. total current Σ Ith^2:	72 A^2
Minimum current:	10 mA
Contact resistance:	≤ 100 mΩ
External protection fuse:	4 A

The number and the load capacity of output contacts can be increased by using expansion modules or contactors. See pages 231-240.

Code structure

CS AR-02V024

Connection type	
V	screw terminals
M	connector with screw terminals
X	connector with spring terminals

Supply voltage		
024	24 Vac/dc	±15%
120	120 Vac	±15%
230	230 Vac	±15%
E02	10 ... 30 Vdc	

Characteristics approved by UL

Rated supply voltage (Un):	24 Vac/dc; 50...60 Hz 120 Vac; 50…60 Hz 230 Vac; 50…60 Hz
AC consumption:	< 5 VA
DC consumption:	< 2 W
Maximum switching voltage:	230 Vac
Max. current per contact:	6 A
Utilization category	C300

Notes:
- Use 60° or 75 °C copper (Cu) conductor, rigid or flexible, wire size AWG 30-12.
- Terminal tightening torque of 5-7 Lb In.
- Only for 24 Vac/dc version, supply from remote class 2 source or limited voltage and limited energy. (Supply from Remote Class 2 Source or limited voltage limited energy).

Safety module CS AR-02

Terminal layout

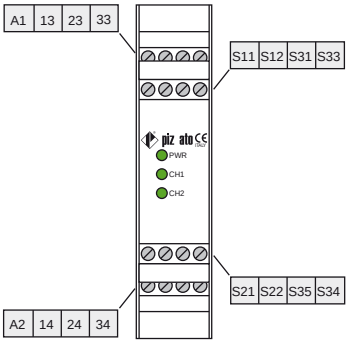

Internal diagram

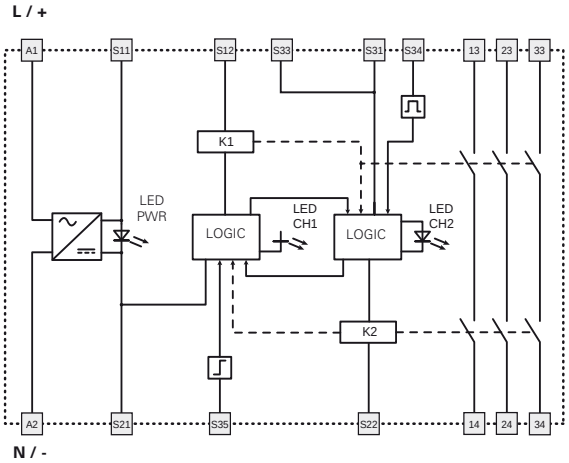

Operation diagrams

Configuration with automatic start

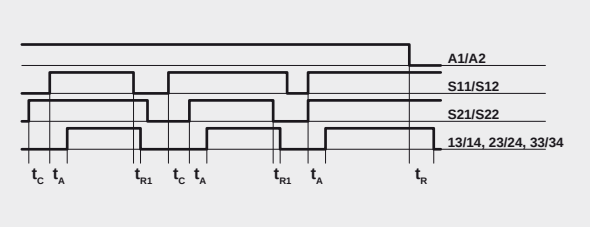

Configuration with monitored start

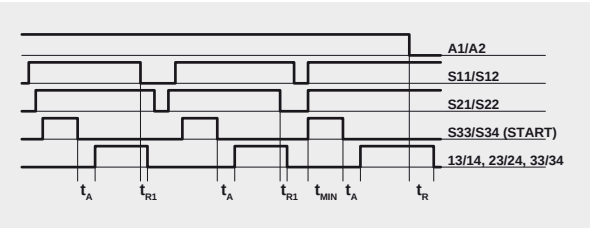

Configuration with manual start

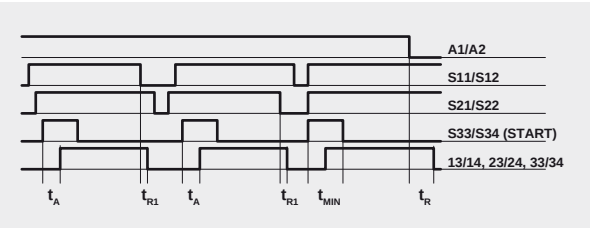

Legend:

- t_{MIN}: min. duration of start impulse
- t_C: simultaneity time
- t_A: operating time
- t_{R1}: releasing time
- t_R: releasing time in absence of power supply

Notes:
The configurations with one channel are obtained taking into consideration only the S11/S12 input. In this case it is necessary to consider time t_{R1} referred to input S11/S12, time t_R referred to the supply, time t_A referred to input S11/S12 and to the start, and time t_{MIN} referred to the start.

Input configuration

Emergency stop circuits	
Input configuration with manual start	
1 channel	2 channels

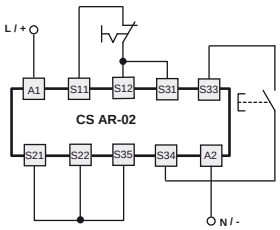

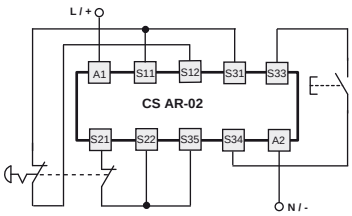

The diagram does not show the exact position of terminals in the product

Automatic start

With regard to the indicated diagrams, bridge the start button between S33 and S34 in order to activate the automatic start module.

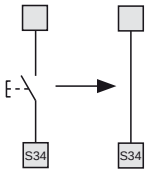

Monitored start

With regard to the indicated diagrams, it is necessary to remove the connection between S22 and S35 in order to activate the monitored start module.

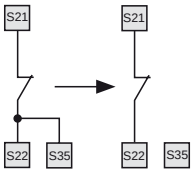

Movable guard monitoring and magnetic safety sensors

The safety module can control emergency stop circuits, movable guard monitoring circuits or magnetic safety sensors. Replace the emergency stop contacts with switch contacts or sensor contacts.
The sensors can only be used in 2-channel configuration.

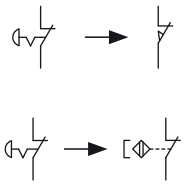

Application examples See page 241

Safety module **CS AR-04**

Module for emergency stop, gate monitoring and magnetic safety sensors

Main features
- For safety applications up to SIL CL 3/PL e
- Input with 1 or 2 channels
- Choice between automatic start, manual start or monitored start
- Connection of the input channels to opposite potentials
- Small 22.5 mm housing
- Output contacts:
  3 NO safety contacts,
  1 NC auxiliary contact
- Supply voltage:
  24 Vac/dc, 120 Vac, 230 Vac

Utilization categories
Alternating current: AC15 (50...60 Hz)
Ue (V) 230
Ie (A) 3
Direct current: DC13 (6 op. cycles/minute)
Ue (V) 24
Ie (A) 4

Markings, quality marks and certificates:

UL approval:	E131787
EC type examination certificate:	IMQ CP 432 DM
EAC approval:	RU C-IT ДМ94.В.01024
CCC approval:	2013010305640211

In conformity with the requirements of:
Low Voltage Directive 2006/95/EC,
Machinery Directive 2006/42/EC,
EMC Directive 2004/108/EC

Technical data

Housing
PA 6.6 polyamide housing, self-extinguishing, V0 acc. to UL 94

Protection degree:	IP40 (housing), IP20 (terminal strip)
Dimensions:	see page 283, design A

General data

SIL CL:	up to SIL CL 3 acc. to EN 62061
Performance Level (PL):	up to PL e acc. to EN ISO 13849-1
Safety category:	up to cat. 4 acc. to EN ISO 13849-1
Safety parameters:	see page 333
Ambient temperature:	-25°C...+55°C
Mechanical endurance:	>10 million operating cycles
Electrical endurance:	>100,000 operating cycles
Pollution degree:	external 3, internal 2
Impulse voltage (Uimp):	4 kV
Rated insulation voltage (Ui):	250 V
Overvoltage category:	II
Weight:	0.3 kg

Supply

Rated supply voltage (Un):	24 Vac/dc; 50...60 Hz 120 Vac; 50…60 Hz 230 Vac; 50…60 Hz
DC maximum residual ripple:	10%
Supply voltage tolerance:	±15% of Un
AC consumption:	< 5 VA
DC consumption:	< 2 W

Control circuit

Protection against short circuits:	resistance PTC, Ih=0.5 A
PTC timing:	intervention > 100 ms, reset > 3 s
Maximum input resistance:	≤ 50 Ω
Input current:	< 30 mA
Min. duration of start impulse t_{MIN}:	> 100 ms
Operating time t_A:	< 50 ms
Releasing time t_{R1}:	< 20 ms
Releasing time in absence of power supply t_R:	< 70 ms
Simultaneity time t_C:	infinite

In conformity with standards:
EN 60204-1, EN ISO 13855, EN 1037, EN ISO 12100, EN ISO 13850,
EN 60529, EN 61000-6-2, EN 61000-6-3, EN 62326-1, EN 60664-1, EN 60947-1,
EN ISO 13849-1, EN ISO 13849-2, EN 62061, UL 508, CSA C22.2 n° 14-95

Output circuit

Output contacts:	3 NO safety contacts 1 NC auxiliary contact
Contact type:	forcibly guided
Contact material:	gold-plated silver alloy
Maximum switching voltage:	230/240 Vac; 300 Vdc
Max. current per contact:	6 A
Conventional free air thermal current Ith:	6 A
Max. total current Σ Ith^2:	64 A^2
Minimum current:	10 mA
Contact resistance:	≤ 100 mΩ
External protection fuse:	4 A

The number and the load capacity of output contacts can be increased by using expansion modules or contactors. See pages 231-240.

Code structure

CS AR-04V024

Connection type	
V	screw terminals
M	connector with screw terminals
X	connector with spring terminals

Supply voltage		
024	24 Vac/dc	±15%
120	120 Vac	±15%
230	230 Vac	±15%

Stock items

CS AR-04V024

Characteristics approved by UL

Rated supply voltage (Un):	24 Vac/dc; 50...60 Hz 120 Vac; 50…60 Hz 230 Vac; 50…60 Hz
AC consumption:	< 5 VA
DC consumption:	< 2 W
Maximum switching voltage:	230 Vac
Max. current per contact:	6 A
Utilization category	C300

Notes:
- Use 60° or 75 °C copper (Cu) conductor, rigid or flexible, wire size AWG 30-12.
- Terminal tightening torque of 5-7 Lb In.
- Only for 24 Vac/dc version, supply from remote class 2 source or limited voltage and limited energy. (Supply from Remote Class 2 Source or limited voltage limited energy).

Safety module CS AR-04

Terminal layout

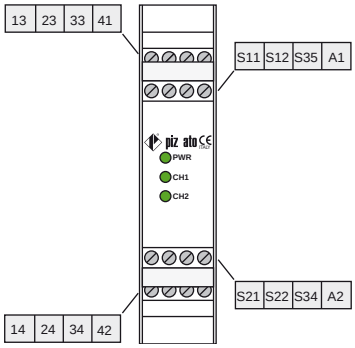

Internal diagram

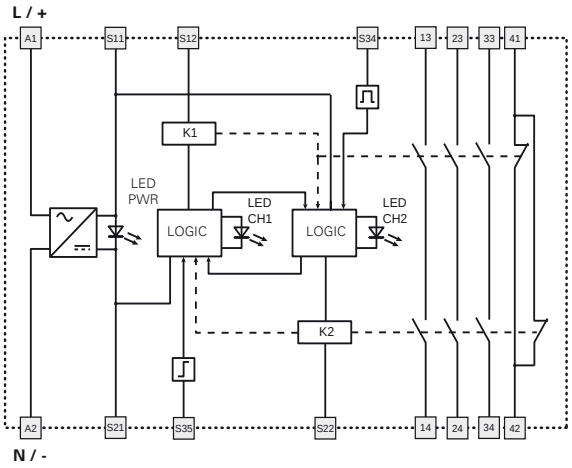

Operation diagrams

Configuration with automatic start

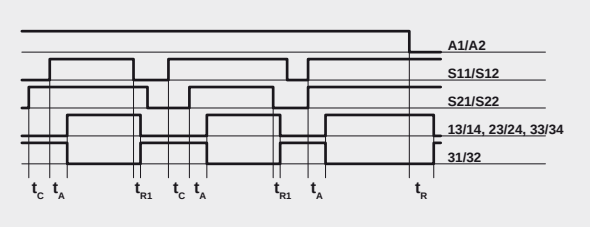

Configuration with monitored start

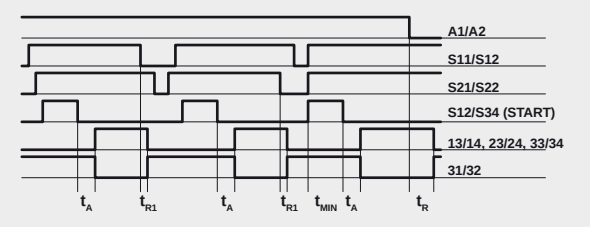

Configuration with manual start

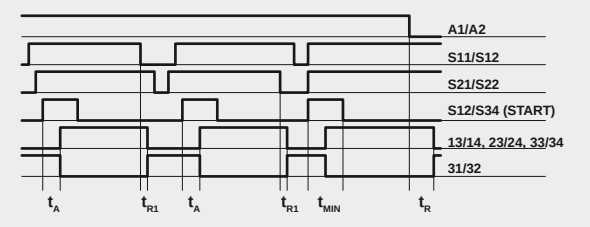

Legend:

- t_{MIN}: min. duration of start impulse
- t_C: simultaneity time
- t_A: operating time
- t_{R1}: releasing time
- t_R: releasing time in absence of power supply

Notes:
The configurations with one channel are obtained taking into consideration only the effect of the S11/S12 input on the supply. In this case it is necessary to consider time t_{R1} referred to input S11/S12, time t_R referred to the supply, time t_A referred to input S11/S12 and to the start, and time t_{MIN}.

Input configuration

Emergency stop circuits	
Input configuration with manual start	
1 channel	2 channels

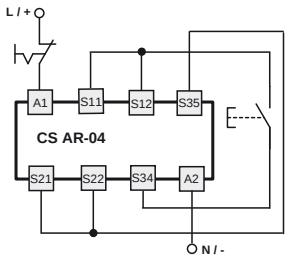

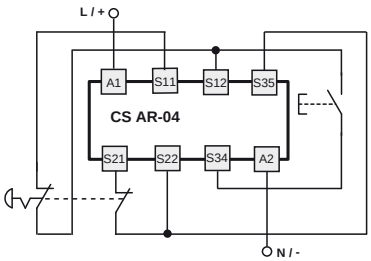

The diagram does not show the exact position of terminals in the product

Automatic start

With regard to the indicated diagrams, bridge the start button between S12 and S34 in order to activate the automatic start module.

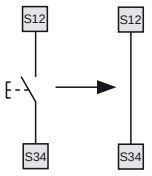

Monitored start

With regard to the indicated diagrams, it is necessary to remove the connection between S22 and S35 in order to activate the monitored start module.

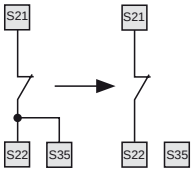

Movable guard monitoring and magnetic safety sensors

The safety module can control emergency stop circuits, movable guard monitoring circuits or magnetic safety sensors. Replace the emergency stop contacts with switch contacts or sensor contacts.
The sensors can only be used in 2-channel configuration.

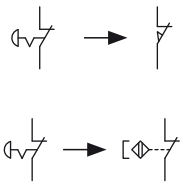

Application examples See page 241

Safety module **CS AR-05 / CS AR-06**

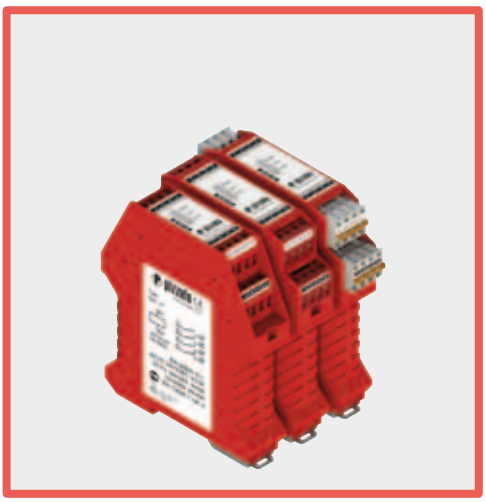

Module for emergency stop, gate monitoring, solid-state output circuits (e.g. light curtains) and magnetic safety sensor

Main features
- For safety applications up to SIL CL 3/PL e
- Input with 1 or 2 channels
- Choice between automatic start, manual start (CS AR-05 only) or monitored start (CS AR-06 only)
- Can be connected to solid-state output circuits (e.g. light curtains), to electromechanical contacts or to magnetic safety sensors
- Output contacts:
  3 NO safety contacts,
  1 NC auxiliary contact
- Supply voltage:
  24 Vac/dc, 120 Vac, 230 Vac

Utilization categories
Alternating current: AC15 (50...60 Hz)
Ue (V) 230
Ie (A) 3
Direct current: DC13 (6 op. cycles/minute)
Ue (V) 24
Ie (A) 4

Markings, quality marks and certificates:

UL approval:	E131787
EC type examination certificate:	IMQ CP 432 DM
EAC approval:	RU C-IT ДМ94.В.01024
CCC approval:	2013010305640211

In conformity with the requirements of:
Low Voltage Directive 2006/95/EC,
Machinery Directive 2006/42/EC,
EMC Directive 2004/108/EC

Technical data

Housing
PA 6.6 polyamide housing, self-extinguishing, V0 acc. to UL 94

Protection degree:	IP40 (housing), IP20 (terminal strip)
Dimensions:	see page 283, design A

General data

SIL CL:	up to SIL CL 3 acc. to EN 62061
Performance Level (PL):	up to PL e acc. to EN ISO 13849-1
Safety category:	up to cat. 4 acc. to EN ISO 13849-1
Safety parameters:	see page 333
Ambient temperature:	-25°C...+55°C
Mechanical endurance:	>10 million operating cycles
Electrical endurance:	>100,000 operating cycles
Pollution degree:	external 3, internal 2
Impulse voltage (Uimp):	4 kV
Rated insulation voltage (Ui):	250 V
Overvoltage category:	II
Weight:	0.3 kg

Supply

Rated supply voltage (Un):	24 Vac/dc; 50...60 Hz 120 Vac; 50…60 Hz 230 Vac; 50…60 Hz
DC maximum residual ripple:	10%
Supply voltage tolerance:	±15% of Un
AC consumption:	< 5 VA
DC consumption:	< 2 W

Control circuit

Protection against short circuits:	resistance PTC, Ih=0.5 A
PTC timing:	intervention > 100 ms, reset > 3 s
Maximum input resistance:	≤ 50 Ω
Input current:	< 30 mA
Min. duration of start impulse t_{MIN}:	> 250 ms
Operating time t_A:	< 200 ms
Releasing time t_{R1}:	<20 ms
Releasing time in absence of power supply t_R:	< 70 ms
Simultaneity time t_C:	infinite

In conformity with standards:
EN 60204-1, EN ISO 13855, EN 1037, EN ISO 12100, EN ISO 13850, EN 60529, EN 61000-6-2, EN 61000-6-3, EN 62326-1, EN 60664-1, EN 60947-1, EN ISO 13849-1, EN ISO 13849-2, EN 62061, UL 508, CSA C22.2 n° 14-95

Output circuit

Output contacts:	3 NO safety contacts 1 NC auxiliary contact
Contact type:	forcibly guided
Contact material:	gold-plated silver alloy
Maximum switching voltage:	230/240 Vac; 300 Vdc
Max. current per contact:	6 A
Conventional free air thermal current Ith:	6 A
Max. total current Σ Ith^2:	64 A^2
Minimum current:	10 mA
Contact resistance:	≤ 100 mΩ
External protection fuse:	4 A

The number and the load capacity of output contacts can be increased by using expansion modules or contactors. See pages 231-240.

Code structure

CS AR-05V024

Start type	
05	manual or automatic start
06	monitored start

Connection type	
V	screw terminals
M	connector with screw terminals
X	connector with spring terminals

Supply voltage		
024	24 Vac/dc	±15%
120	120 Vac	±15%
230	230 Vac	±15%

Stock items

CS AR-05V024

Characteristics approved by UL

Rated supply voltage (Un):	24 Vac/dc; 50...60 Hz 120 Vac; 50…60 Hz 230 Vac; 50…60 Hz
AC consumption:	< 5 VA
DC consumption:	< 2 W
Maximum switching voltage:	230 Vac
Max. current per contact:	6 A
Utilization category	C300

Notes:
- Use 60° or 75 °C copper (Cu) conductor, rigid or flexible, wire size AWG 30-12.
- Terminal tightening torque of 5-7 Lb In.
- Only for 24 Vac/dc version, supply from remote class 2 source or limited voltage and limited energy. (Supply from Remote Class 2 Source or limited voltage limited energy).

Safety module CS AR-05-06

Terminal layout

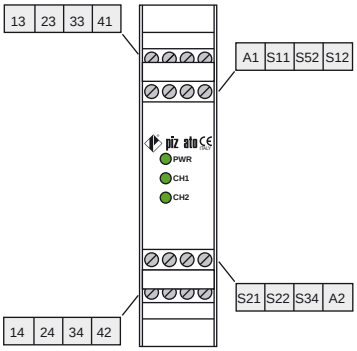

Internal diagram

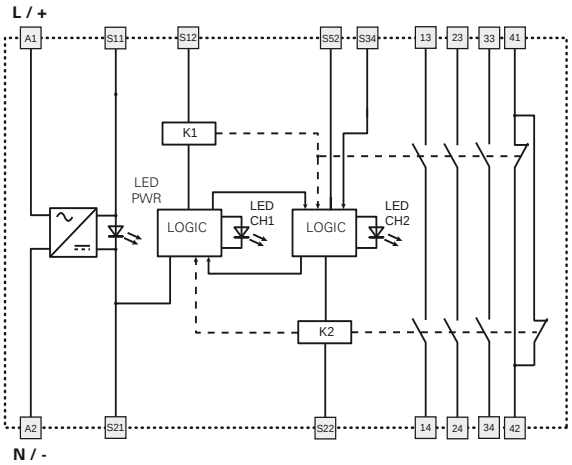

Operation diagrams

Configuration with automatic start (CS AR-05 only)

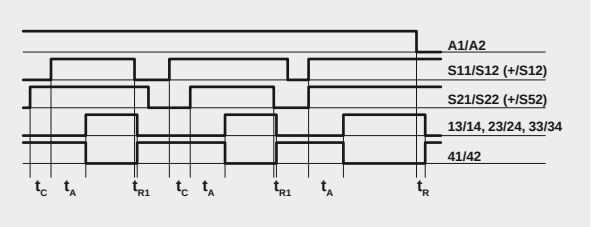

Configuration with monitored start (CS AR-06 only)

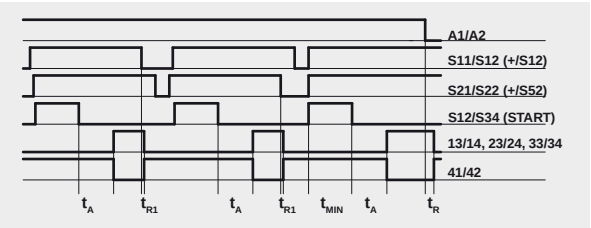

Configuration with manual start (CS AR-05 only)

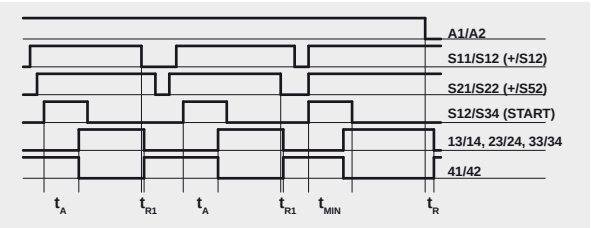

Legend:

- t_{MIN}: min. duration of start impulse
- t_C: simultaneity time
- t_A: operating time
- t_{R1}: releasing time
- t_R: releasing time in absence of power supply

Notes:
The configurations with one channel are obtained taking into consideration only the CH1 input. In this case it is necessary to consider time t_{R1} referred to input CH1, time t_R referred to the supply, time t_A referred to input CH1 and to the start, and time t_{MIN} referred to the start.

Input configuration

Solid state output circuits (e.g. light curtains)

Input configuration with manual start (CS AR-05)

1 channel

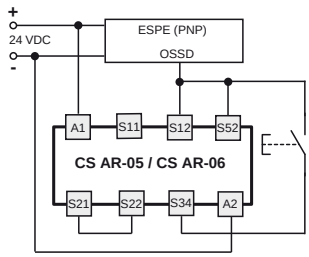

2 channels

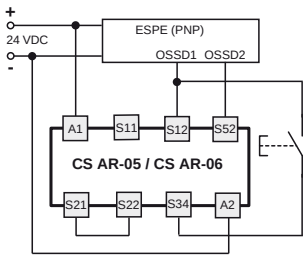

Emergency stop circuits

Input configuration with manual start (CS AR-05)

1 channel

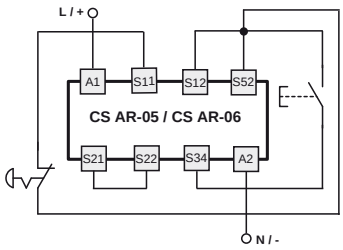

2 channels

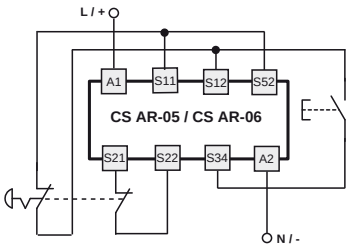

The diagram does not show the exact position of terminals in the product

Automatic start (CS AR-05 only)

Bridge the start button between S12 and S34 in order to activate the automatic start module.

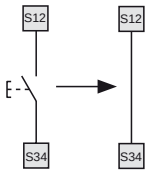

Monitored start

Use the CS AR-06 module following the diagrams for the manual start.

Movable guard monitoring and magnetic safety sensors

The safety module can control emergency stop circuits, movable guard monitoring circuits or magnetic safety sensors. Replace the emergency stop contacts with switch contacts or sensor contacts. **The sensors can only be used in 2-channel configuration.**

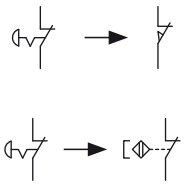

Application examples See page 241

Safety module **CS AR-07**

Module for emergency stop and gate monitoring

Main features
- For safety applications up to SIL CL 3/PL e
- Input with 1 or 2 channels
- Choice between automatic start, manual start or monitored start
- Connection of the input channels to opposite potentials
- Small 22.5 mm housing
- Output contacts:
  4 NO safety contacts,
  1 NC auxiliary contact
- Supply voltage:
  24 Vac/dc

Utilization categories
Alternating current: AC15 (50...60 Hz)
Ue (V) 230
Ie (A) 3
Direct current: DC13 (6 op. cycles/minute)
Ue (V) 24
Ie (A) 4

Markings, quality marks and certificates:

UL approval:	E131787
EC type examination certificate:	IMQ CP 432 DM
EAC approval:	RU C-IT ДМ94.В.01024
CCC approval:	2013010305640211

In conformity with the requirements of:
Low Voltage Directive 2006/95/EC,
Machinery Directive 2006/42/EC,
EMC Directive 2004/108/EC

Technical data

Housing
PA 6.6 polyamide housing, self-extinguishing, V0 acc. to UL 94

Protection degree:	IP40 (housing), IP20 (terminal strip)
Dimensions:	see page 283, design B

General data

SIL CL:	up to SIL CL 3 acc. to EN 62061
Performance Level (PL):	up to PL e acc. to EN ISO 13849-1
Safety category:	up to cat. 4 acc. to EN ISO 13849-1
Safety parameters:	see page 333
Ambient temperature:	-25°C...+55°C
Mechanical endurance:	>10 million operating cycles
Electrical endurance:	>100,000 operating cycles
Pollution degree:	external 3, internal 2
Impulse voltage (Uimp):	4 kV
Rated insulation voltage (Ui):	250 V
Overvoltage category:	II
Weight:	0.3 kg

Supply

Rated supply voltage (Un):	24 Vac/dc; 50...60 Hz
DC maximum residual ripple:	10%
Supply voltage tolerance:	±15% of Un
AC consumption:	< 5 VA
DC consumption:	< 2 W

Control circuit

Protection against short circuits:	resistance PTC, Ih=0.5 A
PTC timing:	intervention > 100 ms, reset > 3 s
Maximum input resistance:	≤ 50 Ω
Input current:	< 30 mA
Min. duration of start impulse t_{MIN}:	> 100 ms
Operating time t_A:	< 70 ms
Releasing time t_{R1}:	< 40 ms
Releasing time in absence of power supply t_R:	< 80 ms
Simultaneity time t_C:	infinite

In conformity with standards:
EN 60204-1, EN ISO 13855, EN 1037, EN ISO 12100, EN ISO 13850, EN 60529, EN 61000-6-2, EN 61000-6-3, EN 62326-1, EN 60664-1, EN 60947-1, EN ISO 13849-1, EN ISO 13849-2, EN 62061, UL 508, CSA C22.2 n° 14-95

Output circuit

Output contacts:	4 NO safety contacts 1 NC auxiliary contact
Contact type:	forcibly guided
Contact material:	gold-plated silver alloy
Maximum switching voltage:	230/240 Vac; 220 Vdc
Max. current per contact:	6 A
Conventional free air thermal current Ith:	6 A
Max. total current Σ Ith^2:	72 A^2
Minimum current:	10 mA
Contact resistance:	≤ 100 mΩ
External protection fuse:	4 A

The number and the load capacity of output contacts can be increased by using expansion modules or contactors. See pages 231-240.

Code structure

CS AR-07M024

Connection type	
M	connector with screw terminals
X	connector with spring terminals

Supply voltage		
024	24 Vac/dc	±15%

Stock items

CS AR-07M024

Characteristics approved by UL

Rated supply voltage (Un):	24 Vac/dc; 50...60 Hz
AC consumption:	< 5 VA
DC consumption:	< 2 W
Maximum switching voltage:	230 Vac
Max. current per contact:	6 A
Utilization category	C300

Notes:
- Use 60° or 75 °C copper (Cu) conductor, rigid or flexible, wire size AWG 30-12.
- Terminal tightening torque of 5-7 Lb In.
- Only for 24 Vac/dc version, supply from remote class 2 source or limited voltage and limited energy. (Supply from Remote Class 2 Source or limited voltage limited energy).

Safety module CS AR-07

Terminal layout

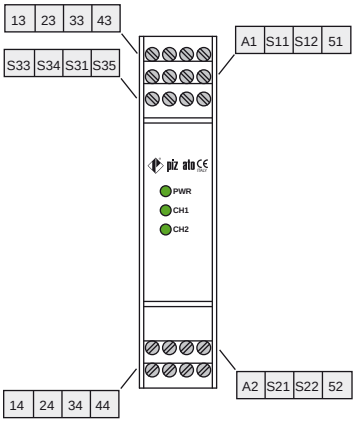

Internal diagram

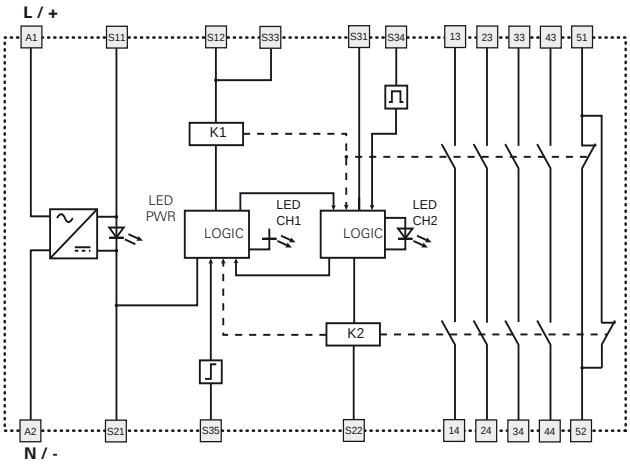

Operation diagrams

Configuration with automatic start

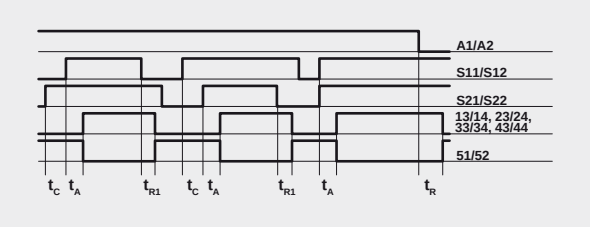

Configuration with monitored start

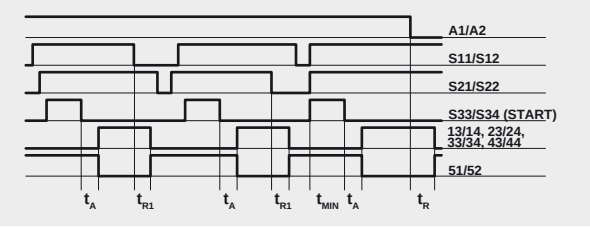

Configuration with manual start

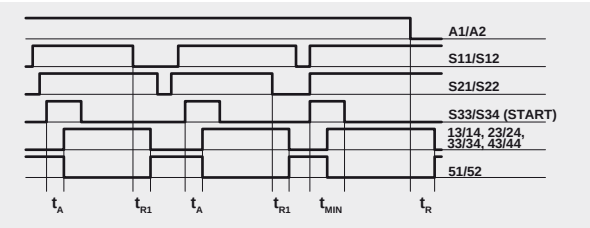

Legend:

- t_{MIN}: min. duration of start impulse
- t_C: simultaneity time
- t_A: operating time
- t_{R1}: releasing time
- t_R: releasing time in absence of power supply

Notes:
The configurations with one channel are obtained taking into consideration only the S11/S12 input. In this case it is necessary to consider time t_{R1} referred to input S11/S12, time t_R referred to the supply, time t_A referred to input S11/S12 and to the start, and time t_{MIN} referred to the start.

Input configuration

Emergency stop circuits	
Input configuration with manual start	
1 channel	2 channels

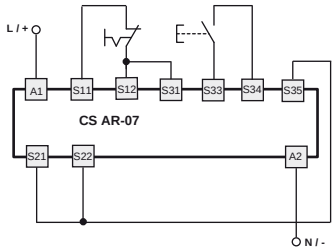

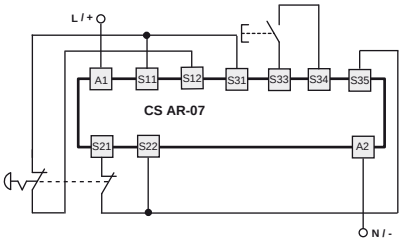

The diagram does not show the exact position of terminals in the product

Automatic start

With regard to the indicated diagrams, bridge the start button between S33 and S34 in order to activate the automatic start module.

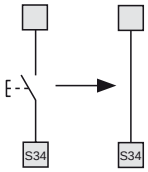

Monitored start

With regard to the indicated diagrams, it is necessary to remove the connection between S22 and S35 in order to activate the monitored start module.

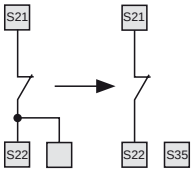

Movable guard monitoring

The safety module can control emergency stop circuits or movable guard monitoring circuits. Replace the emergency stop contacts with the switch contacts.

Application examples See page 241

Safety module **CS AR-08**

Module for emergency stop, gate monitoring, solid-state output circuits (e.g. light curtains) and magnetic safety sensor

Main features
- For safety applications up to SIL CL 3/PL e
- Input with 1 or 2 channels
- Choice between automatic start, manual start or monitored start
- Can be connected to solid-state output circuits (e.g. light curtains), to electromechanical contacts or to magnetic safety sensors
- Output contacts: 2 NO safety contacts
- Supply voltage: 12 Vdc, 24 Vac/dc, 120 Vac, 230 Vac
- Possibility of parallel reset of several modules

Utilization categories
Alternating current: AC15 (50...60 Hz)
Ue (V) 230
Ie (A) 3
Direct current: DC13 (6 op. cycles/minute)
Ue (V) 24
Ie (A) 4

Markings and quality marks:

UL approval: E131787
EC type examination certificate: IMQ CP 432 DM
TÜV SÜD approval: Z10 10 09 75157 002
EAC approval: RU C-IT ДМ94.В.01024
CCC approval: 2013010305640211

In conformity with the requirements of:
Low Voltage Directive 2006/95/EC,
Machinery Directive 2006/42/EC,
EMC Directive 2004/108/EC

Technical data

Housing
PA 6.6 polyamide housing, self-extinguishing, V0 acc. to UL 94

Protection degree:	IP40 (housing), IP20 (terminal strip)
Dimensions:	see page 283, design A

General data

SIL CL:	up to SIL CL 3 acc. to EN 62061
Performance Level (PL):	up to PL e acc. to EN ISO 13849-1
Safety category:	up to cat. 4 acc. to EN ISO 13849-1
Safety parameters:	see page 333
Ambient temperature:	-25°C...+55°C
Mechanical endurance:	>10 million operating cycles
Electrical endurance:	>100,000 operating cycles
Pollution degree:	external 3, internal 2
Impulse voltage (Uimp):	4 kV
Rated insulation voltage (Ui):	250 V
Overvoltage category:	II
Weight:	0.3 kg

Supply

Rated supply voltage (Un):	12 Vdc 24 Vac/dc; 50...60 Hz 120 Vac; 50…60 Hz 230 Vac; 50…60 Hz
DC maximum residual ripple:	10%
Supply voltage tolerance:	±15% of Un
AC consumption:	< 5 VA
DC consumption:	< 2 W

Control circuit

Protection against short circuits:	resistance PTC, Ih=0.5 A
PTC timing:	intervention > 100 ms, reset > 3 s
Maximum input resistance:	≤ 50 Ω (15 Ω)*
Input current:	< 30 mA (70 mA)*
Min. duration of start impulse t_{MIN}:	> 200 ms (100 ms)*
Operating time t_A:	< 150 ms (220 ms)*
Releasing time t_{R1}:	< 20 ms (15 ms)*
Releasing time in absence of power supply t_R:	< 150 ms (50 ms)*
Simultaneity time t_C:	infinite

* version CS AR-08•U12

In conformity with standards:
EN 60204-1, EN ISO 13855, EN 1037, EN ISO 12100, EN ISO 13850, EN 60529, EN 61000-6-2, EN 61000-6-3, EN 62326-1, EN 60664-1, EN 60947-1, EN ISO 13849-1, EN ISO 13849-2, EN 62061, UL 508, CSA C22.2 n° 14-95

Output circuit

Output contacts:	2 NO safety contacts,
Contact type:	forcibly guided
Contact material:	gold-plated silver alloy
Maximum switching voltage:	230/240 Vac; 300 Vdc
Max. current per contact:	6 A
Conventional free air thermal current Ith:	6 A
Max. total current Σ Ith^2:	36 A^2
Minimum current:	10 mA
Contact resistance:	≤ 100 mΩ
External protection fuse:	4 A

The number and the load capacity of output contacts can be increased by using expansion modules or contactors. See pages 231-240.

Characteristics approved by UL
Rated supply voltage (Un): 24 Vac/dc, 50...60 Hz, 120 Vac; 50...60 Hz: 230 Vac; 50…60 Hz
AC consumption: < 5 VA
DC consumption: < 2 W
Maximum switching voltage: 230 Vac
Max. current per contact: 6 A
Utilization category: C300
- Use 60° or 75 °C copper (Cu) conductor, rigid or flexible, wire size AWG 30-12.
- Terminal tightening torque of 5-7 Lb In.
- Only for 24 Vac/dc version, supply from remote class 2 source or limited voltage and limited energy. (Supply from Remote Class 2 Source or limited voltage limited energy).

Characteristics approved by TÜV SÜD
Rated supply voltage (Un): 24 Vac/dc, ± 15%, 120 Vac ± 15%, 230 Vac ± 15%
Consumption: 5 VA max. AC, 2 W max. DC
Rated operating current (max.): 4 A
Max. switching load (max.): 1380 VA
Ambient temperature: -25°C … + 55°C
Storage temperature: -25 °C … + 70°C
Protection degree: IP40 (housing), IP20 (terminal strip)
In conformity with standards: 2006/42/EEC Machine Directive, EN ISO 13849-1 (up to Cat. 4 PL e), EN 50178:1997, EN 60947-5-3/A1:2005, EN 61508-1:1998 (SIL CL 1-3), EN 61508-2:2000 (SIL CL 1-3), EN 61508-4:1998 (SIL CL 1-3), IEC 62061:2005 (SIL CL 3)

Code structure

CS AR-08V024

Connection type	
V	screw terminals
M	connector with screw terminals
X	connector with spring terminals

Supply voltage		
U12	12 Vdc	-10% ... 15%
024	24 Vac/dc	±15%
120	120 Vac	±15%
230	230 Vac	±15%

Stock items

CS AR-08V024

Safety module CS AR-08

Terminal layout

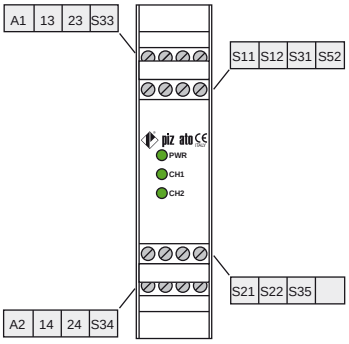

Operation diagrams

Configuration with automatic start

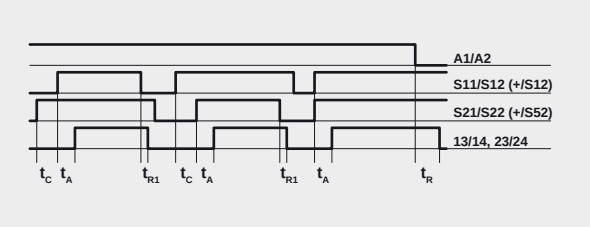

Configuration with monitored start

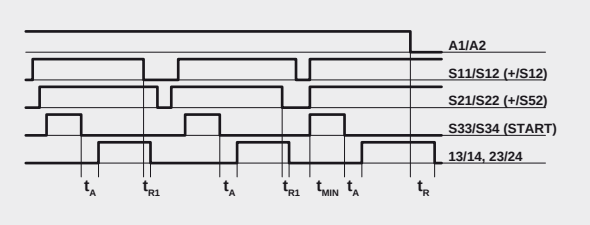

Configuration with manual start

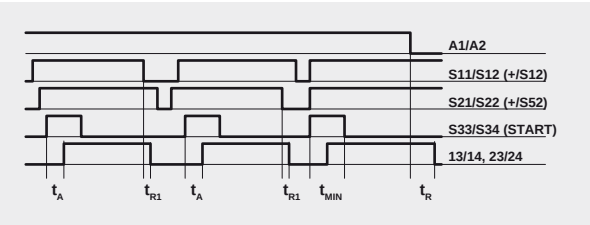

Legend:

t_{MIN}: min. duration of start impulse
t_C: simultaneity time
t_A: operating time
t_{R1}: releasing time
t_R: releasing time in absence of power supply

Notes:
The configurations with one channel are obtained taking into consideration only the CH1 input. In this case it is necessary to consider time t_{R1} referred to input CH1, time t_R referred to the supply, time t_A referred to input CH1 and to the start, and time t_{MIN} referred to the start.

Internal diagram

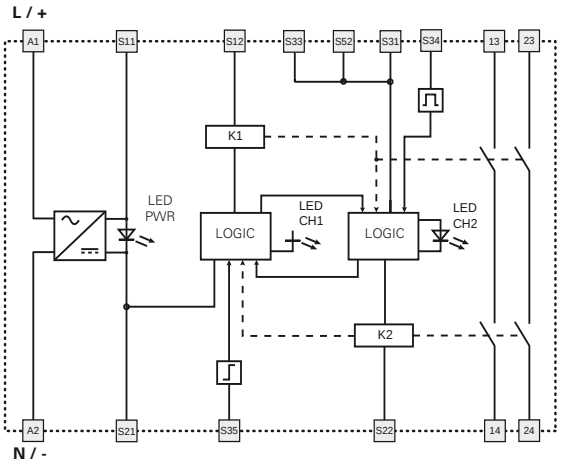

Input configuration

Solid state output circuits (e.g. light curtains)

Input configuration with manual start

1 channel

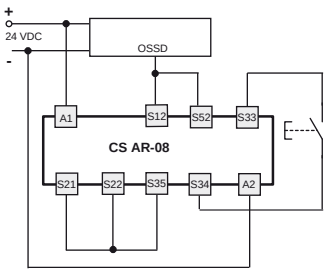

2 channels

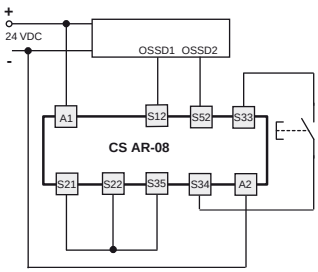

Emergency stop circuits

Input configuration with manual start

1 channel

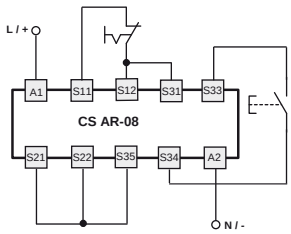

2 channels

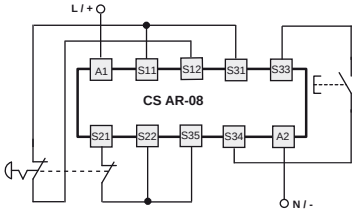

The diagram does not show the exact position of terminals in the product

Automatic start

With regard to the indicated diagrams, bridge the start button between S33 and S34 in order to activate the automatic start module.

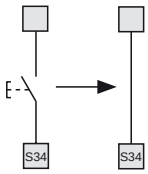

Monitored start

With regard to the indicated diagrams, it is necessary to remove the connection between S22 and S35 in order to activate the monitored start module.

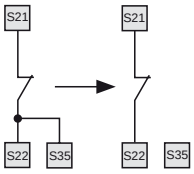

Movable guard monitoring and magnetic safety sensors

The safety module can control emergency stop circuits, movable guard monitoring circuits or magnetic safety sensors. Replace the emergency stop contacts with switch contacts or sensor contacts.
The sensors can only be used in 2-channel configuration.

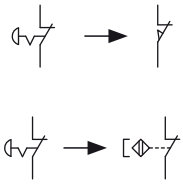

Application examples See page 241

Safety module **CS AR-20 / CS AR-21**

Module for emergency stop and gate monitoring

Main features
- For safety applications up to SIL CL 3/PL e
- Input with 1 or 2 channels
- Choice between automatic start, manual start (CS AR-20 only) or monitored start (CS AR-21 only)
- Small 22.5 mm housing
- 2 NO safety contacts
- Supply voltage: 24 Vac/dc, 120 Vac, 230 Vac

Utilization categories
Alternating current: AC15 (50...60 Hz)
Ue (V) 230
Ie (A) 3
Direct current: DC13 (6 op. cycles/minute)
Ue (V) 24
Ie (A) 4

Markings, quality marks and certificates:

UL approval:	E131787
EAC approval:	RU C-IT ДМ94.B.01024
CCC approval:	2013010305640211

In conformity with the requirements of:
Low Voltage Directive 2006/95/EC,
Machinery Directive 2006/42/EC,
EMC Directive 2004/108/EC

Technical data

Housing
PA 6.6 polyamide housing, self-extinguishing, V0 acc. to UL 94

Protection degree:	IP40 (housing), IP20 (terminal strip)
Dimensions:	see page 283, design A

General data

SIL CL:	up to SIL CL 3 acc. to EN 62061
Performance Level (PL):	up to PL e acc. to EN ISO 13849-1
Safety category:	up to cat. 3 acc. to EN ISO 13849-1
Safety parameters:	see page 333
Ambient temperature:	-25°C...+55°C
Mechanical endurance:	>10 million operating cycles
Electrical endurance:	>100,000 operating cycles
Pollution degree:	external 3, internal 2
Impulse voltage (Uimp):	4 kV
Rated insulation voltage (Ui):	250 V
Overvoltage category:	II
Weight:	0.2 kg

Supply

Rated supply voltage (Un):	24 Vac/dc; 50...60 Hz 120 Vac; 50…60 Hz 230 Vac; 50…60 Hz
DC maximum residual ripple:	10%
Supply voltage tolerance:	±15% of Un
AC consumption:	< 5 VA
DC consumption:	< 2 W

Control circuit

Protection against short circuits:	resistance PTC, Ih=0.5 A
PTC timing:	intervention > 100 ms, reset > 3 s
Maximum input resistance:	≤ 50 Ω
Input current:	< 70 mA
Min. duration of start impulse t_{MIN}:	> 100 ms
Operating time t_A:	< 50 ms
Releasing time in absence of power supply t_R:	< 100 ms
Simultaneity time t_C:	infinite

In conformity with standards:
EN 60204-1, EN ISO 13855, EN 1037, EN ISO 12100, EN ISO 13850, EN 60529, EN 61000-6-2, EN 61000-6-3, EN 62326-1, EN 60664-1, EN 60947-1, EN ISO 13849-1, EN ISO 13849-2, EN 62061, UL 508, CSA C22.2 n° 14-95

Output circuit

Output contacts:	2 NO safety contacts
Contact type:	forcibly guided
Contact material:	gold-plated silver alloy
Maximum switching voltage:	230/240 Vac; 300 Vdc
Max. current per contact:	6 A
Conventional free air thermal current Ith:	6 A
Max. total current Σ Ith^2:	36 A^2
Minimum current:	10 mA
Contact resistance:	≤ 100 mΩ
External protection fuse:	4 A

The number and the load capacity of output contacts can be increased by using expansion modules or contactors. See pages 231-240.

Code structure

CS AR-20V024

Start type	
20	manual or automatic start
21	monitored start

Connection type	
V	screw terminals
M	connector with screw terminals
X	connector with spring terminals

Supply voltage		
024	24 Vac/dc	±15%
120	120 Vac	±15%
230	230 Vac	±15%

Stock items

CS AR-20V024

Characteristics approved by UL

Rated supply voltage (Un):	24 Vac/dc; 50...60 Hz 120 Vac; 50…60 Hz 230 Vac; 50…60 Hz
AC consumption:	< 5 VA
DC consumption:	< 2 W
Maximum switching voltage:	30 Vac
Max. current per contact:	A
Utilization category	C300

Notes:
- Use 60° or 75 °C copper (Cu) conductor, rigid or flexible, wire size AWG 30-12.
- Terminal tightening torque of 5-7 Lb In.
- Only for 24 Vac/dc version, supply from remote class 2 source or limited voltage and limited energy. (Supply from Remote Class 2 Source or limited voltage limited energy).

Safety module CS AR-20 / CS AR-21

Terminal layout

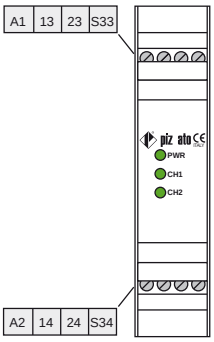

Internal diagram

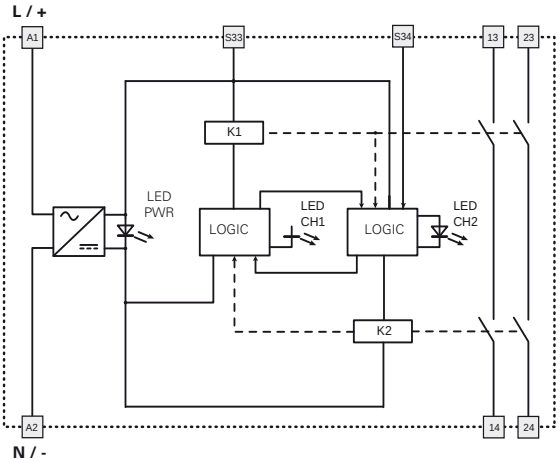

Operation diagrams

Configuration with automatic start (CS AR-20 only)

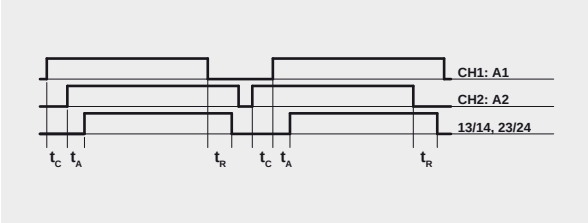

Configuration with monitored start (CS AR-21 only)

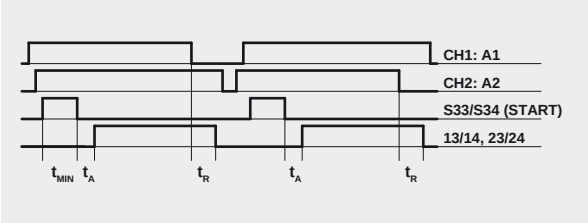

Configuration with manual start (CS AR-20 only)

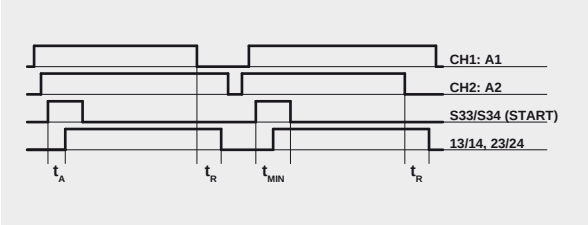

Legend:

t_{MIN}: min. duration of start impulse
t_C: simultaneity time
t_A: operating time
t_R: releasing time in absence of power supply

Notes:
The configurations with one channel are obtained taking into consideration only the CH1:A1 input. In this case it is necessary to consider time t_R referred to input CH1:A1, time t_A referred to input CH1:A1 and to the start, and time t_{MIN} referred to the start.

Input configuration

Emergency stop circuits	
Input configuration with manual start	
1 channel	2 channels

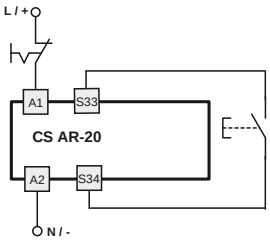

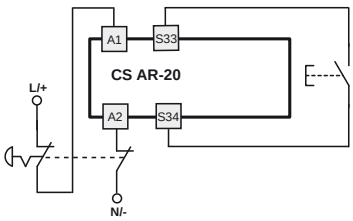

The diagram does not show the exact position of terminals in the product

Automatic start

With regard to the indicated diagrams, bridge the start button between S33 and S34 in order to activate the automatic start module.

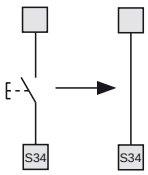

Monitored start

Use the CS AR-21 module following the diagram for the manual start.

Movable guard monitoring

The safety module can control emergency stop circuits or movable guard monitoring circuits. Replace the emergency stop contacts with the switch contacts.

Application examples See page 241

Safety module **CS AR-22 / CS AR-23**

Module for emergency stop and gate monitoring

Main features
- For safety applications up to SIL CL 3/PL e
- Input with 1 or 2 channels
- Choice between automatic start, manual start (CS AR-22 only) or monitored start (CS AR-23 only)
- Small 22.5 mm housing
- 3 NO safety contacts, 1 NC auxiliary contact
- Supply voltage: 24 Vac/dc, 120 Vac, 230 Vac

Utilization categories
Alternating current: AC15 (50...60 Hz)
Ue (V) 230
Ie (A) 3
Direct current: DC13 (6 op. cycles/minute)
Ue (V) 24
Ie (A) 4

Markings, quality marks and certificates:

UL approval:	E131787
EAC approval:	RU C-IT ДМ94.В.01024
CCC approval:	2013010305640211

In conformity with the requirements of:
Low Voltage Directive 2006/95/EC,
Machinery Directive 2006/42/EC,
EMC Directive 2004/108/EC

Technical data

Housing
PA 6.6 polyamide housing, self-extinguishing, V0 acc. to UL 94

Protection degree:	IP40 (housing), IP20 (terminal strip)
Dimensions:	see page 283, design A

General data

SIL CL:	up to SIL CL 3 acc. to EN 62061
Performance Level (PL):	up to PL e acc. to EN ISO 13849-1
Safety category:	up to cat. 3 acc. to EN ISO 13849-1
Safety parameters:	see page 333
Ambient temperature:	-25°C...+55°C
Mechanical endurance:	>10 million operating cycles
Electrical endurance:	>100,000 operating cycles
Pollution degree:	external 3, internal 2
Impulse voltage (Uimp):	4 kV
Rated insulation voltage (Ui):	250 V
Overvoltage category:	II
Weight:	0.2 kg

Supply

Rated supply voltage (Un):	24 Vac/dc; 50...60 Hz 120 Vac; 50…60 Hz 230 Vac; 50…60 Hz
DC maximum residual ripple:	10%
Supply voltage tolerance:	±15% of Un
AC consumption:	< 5 VA
DC consumption:	< 2 W

Control circuit

Protection against short circuits:	resistance PTC, Ih=0.5 A
PTC timing:	intervention > 100 ms, reset > 3 s
Maximum input resistance:	≤ 50 Ω
Input current:	< 70 mA
Min. duration of start impulse t_{MIN}:	> 100 ms
Operating time t_A:	< 50 ms
Releasing time in absence of power supply t_R:	< 75 ms
Simultaneity time t_C:	infinite

In conformity with standards:
EN 60204-1, EN ISO 13855, EN 1037, EN ISO 12100, EN ISO 13850, EN 60529, EN 61000-6-2, EN 61000-6-3, EN 62326-1, EN 60664-1, EN 60947-1, EN ISO 13849-1, EN ISO 13849-2, EN 62061, UL 508, CSA C22.2 n° 14-95

Output circuit

Output contacts:	3 NO safety contacts, 1 NC auxiliary contact
Contact type:	forcibly guided
Contact material:	gold-plated silver alloy
Maximum switching voltage:	230/240 Vac; 300 Vdc
Max. current per contact:	6 A
Conventional free air thermal current Ith:	6 A
Max. total current Σ Ith^2:	80 A^2
Minimum current:	10 mA
Contact resistance:	≤ 100 mΩ
External protection fuse:	4 A

The number and the load capacity of output contacts can be increased by using expansion modules or contactors. See pages 231-240.

Code structure

CS AR-22V024

Start type	
22	manual or automatic start
23	monitored start

Connection type	
V	screw terminals
M	connector with screw terminals
X	connector with spring terminals

Supply voltage		
024	24 Vac/dc	±15%
120	120 Vac	±15%
230	230 Vac	±15%

Stock items

CS AR-22V024

Characteristics approved by UL

Rated supply voltage (Un):	24 Vac/dc; 50...60 Hz 120 Vac; 50…60 Hz 230 Vac; 50…60 Hz
AC consumption:	< 5 VA
DC consumption:	< 2 W
Maximum switching voltage:	230 Vac
Max. current per contact:	6 A
Utilization category	C300

Notes:
- Use 60° or 75 °C copper (Cu) conductor, rigid or flexible, wire size AWG 30-12.
- Terminal tightening torque of 5-7 Lb In.
- Only for 24 Vac/dc version, supply from remote class 2 source or limited voltage and limited energy. (Supply from Remote Class 2 Source or limited voltage limited energy).

Safety module CS AR-22 / CS AR-23

Terminal layout

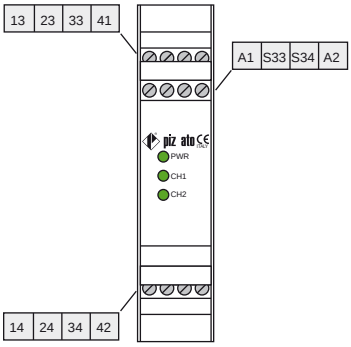

Internal diagram

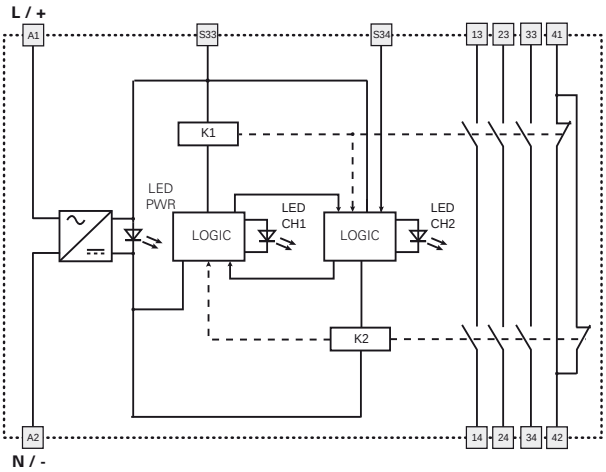

Operation diagrams

Configuration with automatic start (CS AR-22 only)

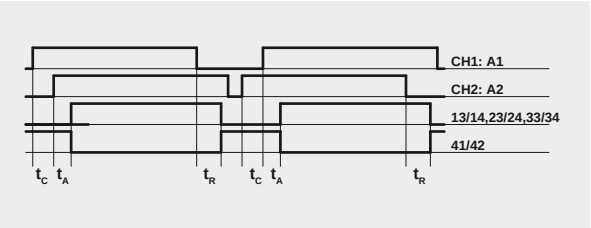

Configuration with monitored start (CS AR-23 only)

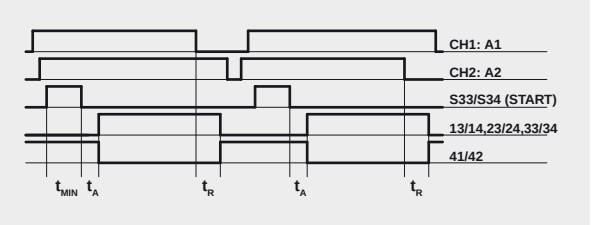

Configuration with manual start (CS AR-22 only)

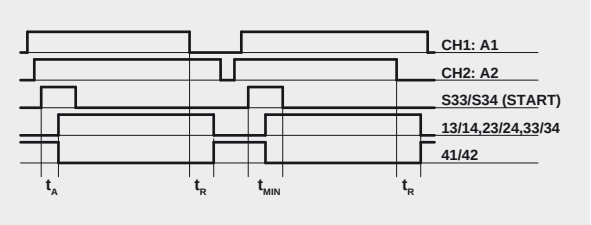

Legend:
t_{MIN}: min. duration of start impulse
t_C: simultaneity time
t_A: operating time
t_R: releasing time in absence of power supply

Notes:
The configurations with one channel are obtained taking into consideration only the CH1:A1 input. In this case it is necessary to consider time t_R referred to input CH1:A1, time t_A referred to input CH1:A1 and to the start, and time t_{MIN} referred to the start.

Input configuration

Emergency stop circuits	
Input configuration with manual start	
1 channel	2 channels

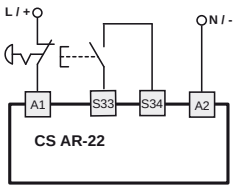

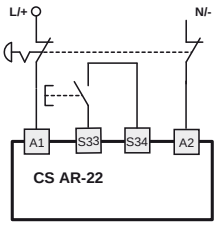

The diagram does not show the exact position of terminals in the product

Automatic start

With regard to the indicated diagrams, bridge the start button between S33 and S34 in order to activate the automatic start module.

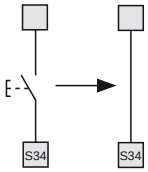

Monitored start

Use the CS AR-23 module following the diagram for the manual start.

Movable guard monitoring

The safety module can control emergency stop circuits or movable guard monitoring circuits. Replace the emergency stop contacts with the switch contacts.

Application examples See page 241

Safety module **CS AR-24 / CS AR-25**

Module for emergency stop and gate monitoring

Main features
- For safety applications up to SIL CL 3/PL e
- Input with 1 or 2 channels
- Choice between automatic start, manual start (CS AR-24 only) or monitored start (CS AR-25 only)
- Small 22.5 mm housing
- 4 NO safety contacts
  1 NC auxiliary contact
- Supply voltage:
  24 Vac/dc

Utilization categories
Alternating current: AC15 (50...60 Hz)
Ue (V) 230
Ie (A) 3
Direct current: DC13 (6 op. cycles/minute)
Ue (V) 24
Ie (A) 4

Markings, quality marks and certificates:

UL approval:	E131787
EAC approval:	RU C-IT ДМ94.B.01024
CCC approval:	2013010305640211

In conformity with the requirements of:
Low Voltage Directive 2006/95/EC,
Machinery Directive 2006/42/EC,
EMC Directive 2004/108/EC

Technical data

Housing
PA 6.6 polyamide housing, self-extinguishing, V0 acc. to UL 94

Protection degree:	IP40 (housing), IP20 (terminal strip)
Dimensions:	see page 283, design A

General data

SIL CL:	up to SIL CL 3 acc. to EN 62061
Performance Level (PL):	up to PL e acc. to EN ISO 13849-1
Safety category:	up to cat. 3 acc. to EN ISO 13849-1
Safety parameters:	see page 333
Ambient temperature:	-25°C...+55°C
Mechanical endurance:	>10 million operating cycles
Electrical endurance:	>100,000 operating cycles
Pollution degree:	external 3, internal 2
Impulse voltage (Uimp):	4 kV
Rated insulation voltage (Ui):	250 V
Overvoltage category:	II
Weight:	0.3 kg

Supply

Rated supply voltage (Un):	24 Vac/dc; 50...60 Hz
DC maximum residual ripple:	10%
Supply voltage tolerance:	±15% of Un
AC consumption:	< 5 VA
DC consumption:	< 2 W

Control circuit

Protection against short circuits:	resistance PTC, Ih=0.5 A
PTC timing:	intervention > 100 ms, reset > 3 s
Maximum input resistance:	≤ 50 Ω
Input current:	< 30 mA
Min. duration of start impulse t_{MIN}:	> 100 ms
Operating time t_A:	< 85 ms
Releasing time t_{R1}:	< 40 ms
Releasing time in absence of power supply t_R:	< 170 ms
Simultaneity time t_C:	infinite

In conformity with standards:
EN 60204-1, EN ISO 13855, EN 1037, EN ISO 12100, EN ISO 13850, EN 60529, EN 61000-6-2, EN 61000-6-3, EN 62326-1, EN 60664-1, EN 60947-1, EN ISO 13849-1, EN ISO 13849-2, EN 62061, UL 508, CSA C22.2 n° 14-95

Output circuit

Output contacts:	4 NO safety contacts, 1 NC auxiliary contact
Contact type:	forcibly guided
Contact material:	gold-plated silver alloy
Maximum switching voltage:	230/240 Vac; 300 Vdc
Max. current per contact:	6 A
Conventional free air thermal current Ith:	6 A
Max. total current Σ Ith^2:	72 A^2
Minimum current:	10 mA
Contact resistance:	≤ 100 mΩ
External protection fuse:	4 A

The number and the load capacity of output contacts can be increased by using expansion modules or contactors. See pages 231-240.

Code structure

CS AR-24V024

Start type	
24	manual or automatic start
25	monitored start

Connection type	
V	screw terminals
M	connector with screw terminals
X	connector with spring terminals

Supply voltage		
024	24 Vac/dc	±15%

Characteristics approved by UL

Rated supply voltage (Un):	24 Vac/dc; 50...60 Hz
AC consumption:	< 5 VA
DC consumption:	< 2 W
Maximum switching voltage:	230 Vac
Max. current per contact:	6 A
Utilization category	C300

Notes:
- Use 60° or 75 °C copper (Cu) conductor, rigid or flexible, wire size AWG 30-12.
- Terminal tightening torque of 5-7 Lb In.
- Only for 24 Vac/dc version, supply from remote class 2 source or limited voltage and limited energy. (Supply from Remote Class 2 Source or limited voltage limited energy).

Safety module CS AR-24 / CS AR-25

Terminal layout

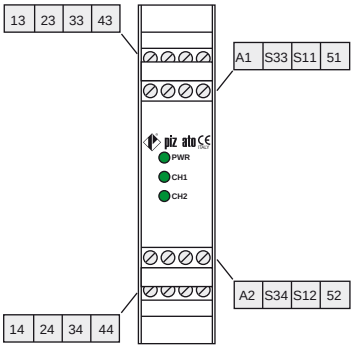

Internal diagram

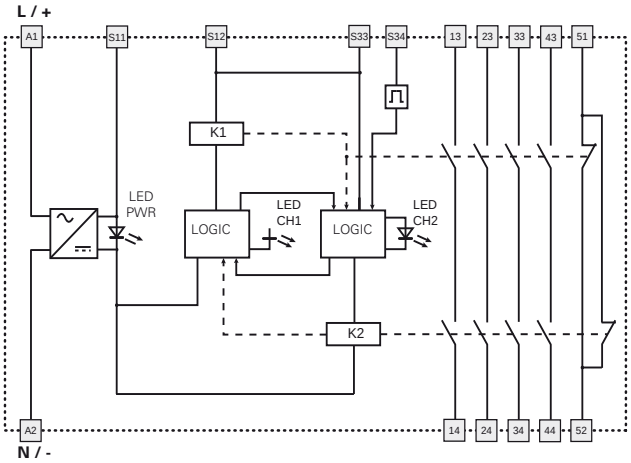

Operation diagrams

Configuration with automatic start (CS AR-24 only)

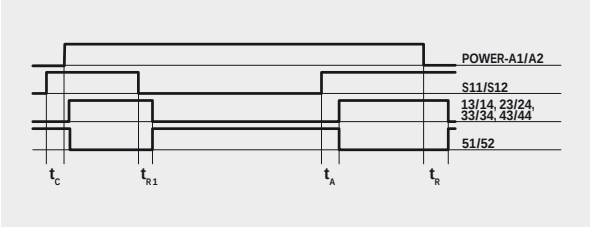

Configuration with monitored start (CS AR-25 only)

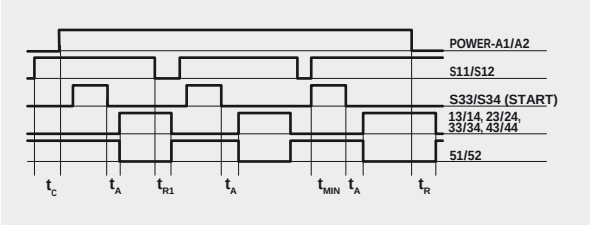

Configuration with manual start (CS AR-24 only)

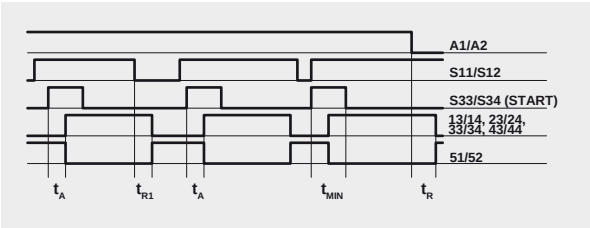

Legend:

- t_{MIN}: min. duration of start impulse
- t_C: simultaneity time
- t_A: operating time
- t_{R1}: releasing time
- t_R: releasing time in absence of power supply

Notes:
The configurations with one channel are obtained taking into consideration only the S11/S12 input. In this case it is necessary to consider time t_{R1} referred to input S11/S12, time t_R referred to the supply, time t_A referred to input S11/S12 and to the start, and time t_{MIN} referred to the start.

Input configuration

Emergency stop circuits	
Input configuration with manual start	
1 channel	2 channels

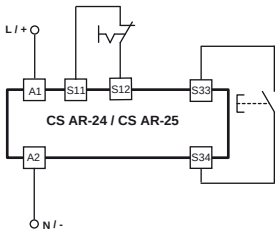

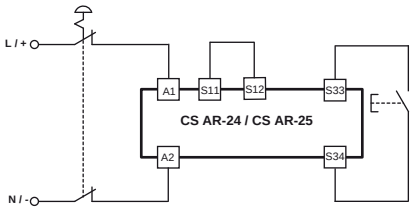

The diagram does not show the exact position of terminals in the product

Automatic start

With regard to the indicated diagrams, bridge the start button between S33 and S34 in order to activate the automatic start module.

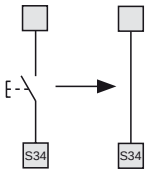

Monitored start

Use the CS AR-25 module following the diagram for the manual start.

Movable guard monitoring

The safety module can control emergency stop circuits or movable guard monitoring circuits. Replace the emergency stop contacts with the switch contacts.

Application examples See page 241

Safety module **CS AR-40 / CS AR-41**

Module for emergency stop and gate monitoring

Main features
- For safety applications up to SIL CL 2/PL d
- Choice between automatic start, manual start (CS AR-40 only) or monitored start (CS AR-41 only)
- Small 22.5 mm housing
- 2 NO safety contacts
- Supply voltage: 24 Vac/dc

Utilization categories
Alternating current: AC15 (50...60 Hz)
Ue (V) 230
Ie (A) 3
Direct current: DC13 (6 op. cycles/minute)
Ue (V) 24
Ie (A) 4

Markings, quality marks and certificates:

UL approval:	E131787
EAC approval:	RU C-IT ДМ94.B.01024
CCC approval:	2013010305640211

In conformity with the requirements of:
Low Voltage Directive 2006/95/EC,
Machinery Directive 2006/42/EC,
EMC Directive 2004/108/EC

Technical data

Housing
PA 6.6 polyamide housing, self-extinguishing, V0 acc. to UL 94

Protection degree:	IP40 (housing), IP20 (terminal strip)
Dimensions:	see page 284, design D

General data

SIL CL:	up to SIL CL 2 acc. to EN 62061
Performance Level (PL):	up to PL d acc. to EN ISO 13849-1
Safety category:	up to cat. 2 acc. to EN ISO 13849-1
Safety parameters:	see page 333
Ambient temperature:	-25°C...+55°C
Mechanical endurance:	>10 million operating cycles
Electrical endurance:	>100,000 operating cycles
Pollution degree:	external 3, internal 2
Impulse voltage (Uimp):	4 kV
Rated insulation voltage (Ui):	250 V
Overvoltage category:	II
Weight:	0.2 kg

Supply

Rated supply voltage (Un):	24 Vac/dc; 50...60 Hz
DC maximum residual ripple:	10%
Supply voltage tolerance:	±15% of Un
AC consumption:	< 5 VA
DC consumption:	< 2 W

Control circuit

Protection against short circuits:	resistance PTC, Ih=0.5 A
PTC timing:	intervention > 100 ms, reset > 3 s
Maximum input resistance:	≤ 50 Ω
Input current:	< 70 mA
Min. duration of start impulse t_{MIN}:	> 100 ms
Operating time t_A:	< 50 ms
Releasing time in absence of power supply t_R:	< 105 ms
Simultaneity time t_C:	infinite

In conformity with standards:
EN 60204-1, EN ISO 13855, EN 1037, EN ISO 12100, EN ISO 13850, EN 60529, EN 61000-6-2, EN 61000-6-3, EN 62326-1, EN 60664-1, EN 60947-1, EN ISO 13849-1, EN ISO 13849-2, EN 62061, UL 508, CSA C22.2 n° 14-95

Output circuit

Output contacts:	2 NO safety contacts
Contact type:	forcibly guided
Contact material:	silver alloy
Maximum switching voltage:	230/240 Vac; 300 Vdc
Max. current per contact:	6 A
Conventional free air thermal current Ith:	6 A
Max. total current Σ Ith^2:	36 A^2
Minimum current:	10 mA
Contact resistance:	≤ 100 mΩ
External protection fuse:	4 A

The number and the load capacity of output contacts can be increased by using expansion modules or contactors. See pages 231-240.

Code structure

CS AR-40V024

Start type	
40	manual or automatic start
41	monitored start

Connection type	
V	screw terminals
M	connector with screw terminals
X	connector with spring terminals

Supply voltage		
024	24 Vac/dc	±15%

Characteristics approved by UL

Rated supply voltage (Un):	24 Vac/dc; 50...60 Hz
AC consumption:	< 5 VA
DC consumption:	< 2 W
Maximum switching voltage:	230 Vac
Max. current per contact:	6 A
Utilization category	C300

Notes:
- Use 60° or 75 °C copper (Cu) conductor, rigid or flexible, wire size AWG 30-12.
- Terminal tightening torque of 5-7 Lb In.
- Only for 24 Vac/dc version, supply from remote class 2 source or limited voltage and limited energy. (Supply from Remote Class 2 Source or limited voltage limited energy).

Safety module CS AR-40 / CS AR-41

Terminal layout

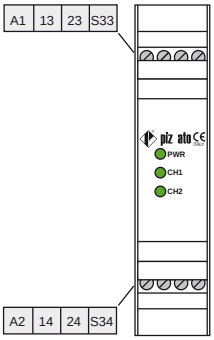

Internal diagram

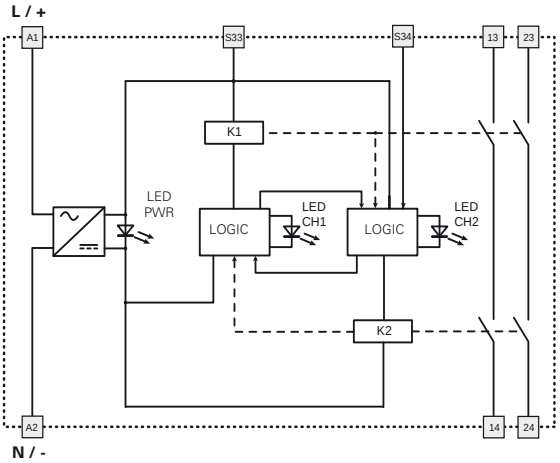

Operation diagrams

1-channel configuration with automatic start (CS AR-40 only)

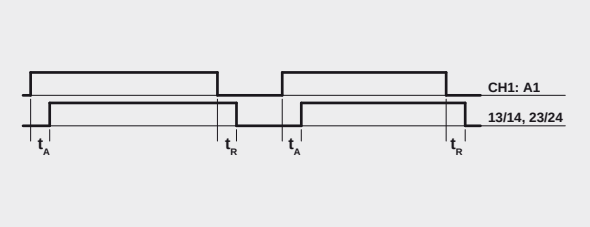

1-channel configuration with manual start (CS AR-40 only)

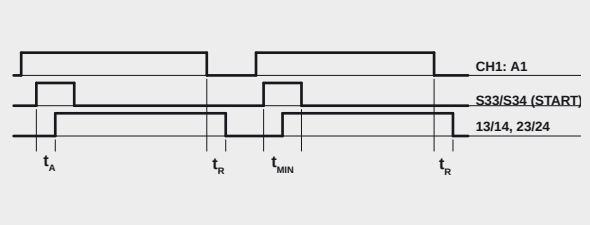

1-channel configuration with monitored start (CS AR-41 only)

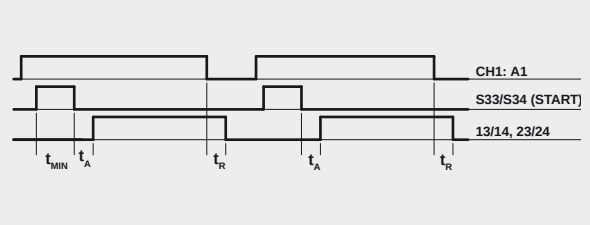

Legend:
t_{MIN}: Min. duration of start impulse
t_A: operating time
t_R: releasing time in absence of power supply

Input configuration

Emergency stop circuits
1-channel input configuration with manual start

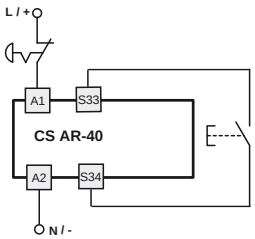

The diagram does not show the exact position of terminals in the product

Automatic start

With regard to the indicated diagram, bridge the start button between S33 and S34 in order to activate the automatic start module.

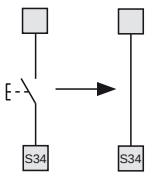

Monitored start

Use the CS AR-41 module following the diagram for the manual start.

Movable guard monitoring

The safety module can control emergency stop circuits or movable guard monitoring circuits. Replace the emergency stop contacts with the switch contacts.

Safety module **CS AR-46**

Module for emergency stop, gate monitoring, devices and magnetic safety sensors

Main features
- For safety applications up to SIL CL 1/PL c
- Small 22.5 mm housing
- 1 NO safety contacts
- Supply voltage: 24 Vac/dc

Utilization categories
Alternating current: AC15 (50...60 Hz)
Ue (V) 230
Ie (A) 3
Direct current: DC13 (6 op. cycles/minute)
Ue (V) 24
Ie (A) 4

Markings, quality marks and certificates:

UL approval:	E131787
EAC approval:	RU C-IT ДМ94.В.01024
CCC approval:	2013010305640211

In conformity with the requirements of:
Low Voltage Directive 2006/95/EC,
Machinery Directive 2006/42/EC,
EMC Directive 2004/108/EC

Technical data

Housing
PA 6.6 polyamide housing, self-extinguishing, V0 acc. to UL 94

Protection degree:	IP40 (housing), IP20 (terminal strip)
Dimensions:	see page 284, design D

General data

SIL CL:	up to SIL CL 1 acc. to EN 62061
Performance Level (PL):	up to PL c acc. to EN ISO 13849-1
Safety category:	up to cat. 1 acc. to EN ISO 13849-1
Safety parameters:	see page 333
Ambient temperature:	-25°C...+55°C
Mechanical endurance:	>10 million operating cycles
Electrical endurance:	>100,000 operating cycles
Pollution degree:	external 3, internal 2
Impulse voltage (Uimp):	4 kV
Rated insulation voltage (Ui):	250 V
Overvoltage category:	II
Weight:	0.2 kg

Supply

Rated supply voltage (Un):	24 Vac/dc; 50...60 Hz
DC maximum residual ripple:	10%
Supply voltage tolerance:	±15% of Un
AC consumption:	< 5 VA
DC consumption:	< 2 W

Control circuit

Protection against short circuits:	resistance PTC, Ih=0.5 A
PTC timing:	intervention > 100 ms, reset > 3 s
Maximum input resistance:	≤ 50 Ω
Input current:	< 20 mA
Operating time t_A:	< 15 ms
Releasing time t_{R1}:	< 20 ms
Releasing time in absence of power supply t_R:	< 100 ms
Simultaneity time t_C:	infinite

In conformity with standards:
EN 60204-1, EN ISO 13855, EN 1037, EN ISO 12100, EN ISO 13850, EN 60529, EN 61000-6-2, EN 61000-6-3, EN 62326-1, EN 60664-1, EN 60947-1, EN ISO 13849-1, EN ISO 13849-2, EN 62061, UL 508, CSA C22.2 n° 14-95

Output circuit

Output contacts:	1 NO safety contacts
Contact material:	silver alloy
Maximum switching voltage:	230/240 Vac; 300 Vdc
Max. current per contact:	6 A
Conventional free air thermal current Ith:	6 A
Minimum current:	10 mA
Contact resistance:	≤ 100 mΩ
External protection fuse:	4 A

The number and the load capacity of output contacts can be increased by using expansion modules or contactors. See pages 231-240.

Code structure

CS AR-46V024

Connection type	
V	screw terminals
M	connector with screw terminals
X	connector with spring terminals

Supply voltage		
024	24 Vac/dc	±15%

Characteristics approved by UL

Rated supply voltage (Un):	24 Vac/dc; 50...60 Hz
AC consumption:	< 5 VA
DC consumption:	< 2 W
Maximum switching voltage:	230 Vac
Max. current per contact:	6 A
Utilization category	C300

Notes:
- Use 60° or 75 °C copper (Cu) conductor, rigid or flexible, wire size AWG 30-12.
- Terminal tightening torque of 5-7 Lb In.
- Only for 24 Vac/dc version, supply from remote class 2 source or limited voltage and limited energy. (Supply from Remote Class 2 Source or limited voltage limited energy).

Safety module CS AR-46

Terminal layout

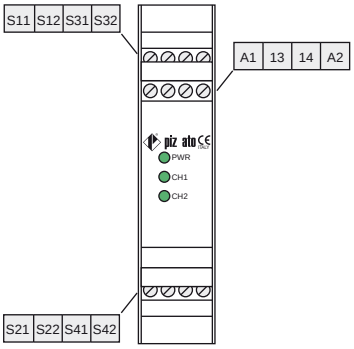

Operation diagrams

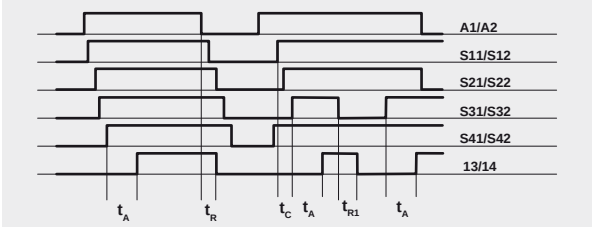

Legend:
t_C: simultaneity time
t_A: operating time
t_{R1}: releasing time
t_R: releasing time in absence of power supply

Internal diagram

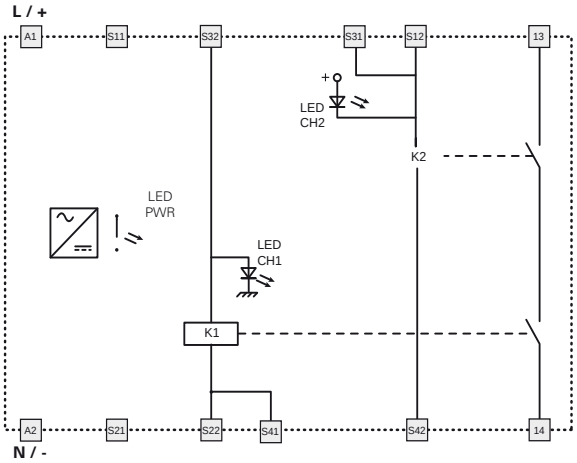

Input configuration

Emergency stop circuits		
Input configuration with automatic start		
2 channels and 1 emergency stop button	2 channels and 2 emergency stop buttons	2 channels and 4 switches

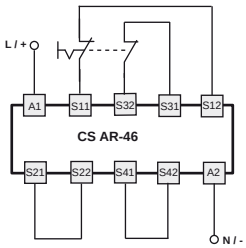

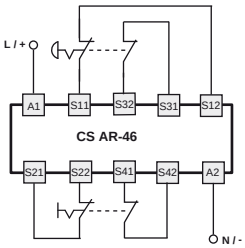

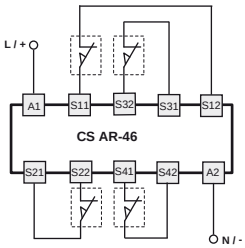

Movable guard monitoring and magnetic safety sensors

The safety module can control emergency stop circuits, movable guard monitoring circuits or magnetic safety sensors. Replace the emergency stop contacts with switch contacts or sensor contacts. **The sensors can only be used in 2-channel configuration.**

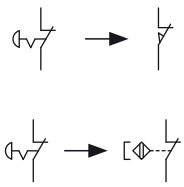

Safety module **CS AR-91**

Module for emergency stop, gate monitoring and magnetic safety sensors

Main features
- For safety applications up to SIL 3 / PL e
- Choice between automatic start, manual start or monitored start
- Connection of the input channels to opposite potentials
- Small 22.5 mm housing
- Output contacts: 2 NO safety contacts, 1NO opto-decoupled, for signalling
- Supply voltage: 24 Vac/dc
- Insensitivity to voltage dips

Utilization categories
Alternating current: AC15 (50...60 Hz)
Ue (V) 230
Ie (A) 3
Direct current: DC13 (6 op. cycles/minute)
Ue (V) 24
Ie (A) 4

Markings, quality marks and certificates:
IMQ certificate of conformity no. 340.
(Standard: EN 81-1:1998 + A3:2009, EN 81-2:1998 + A3:2009)
EC type examination certificate: IMQ CP 432 DM
(Machinery Directive)
IMQ type examination certificate no. 236
(Machinery Directive)
UL approval: E131787
EAC approval: RU C-IT ДМ94.В.01024
CCC approval: 2013010305640211

In conformity with the requirements of:
Low Voltage Directive 2006/95/EC,
Machinery Directive 2006/42/EC,
EMC Directive 2004/108/EC

Technical data

Housing
PA 6.6 polyamide housing, self-extinguishing, V0 acc. to UL 94

Protection degree:	IP40 (housing), IP20 (terminal strip)
Dimensions:	see page 283, design A

General data

SIL CL:	up to SIL CL 3 acc. to EN 62061
Performance Level (PL):	up to PL e acc. to EN ISO 13849-1
Safety category:	up to cat. 4 acc. to EN ISO 13849-1
Safety parameters:	see page 333
Ambient temperature:	-25°C...+55°C
Mechanical endurance:	>10 million operating cycles
Electrical endurance:	>100,000 operating cycles
Pollution degree:	external 3, internal 2
Impulse voltage (Uimp):	4 kV
Rated insulation voltage (Ui):	250 V
Overvoltage category:	II
Weight:	0.2 kg

Supply

Rated supply voltage (Un):	24 Vac/dc; ±15%; 50...60 Hz
DC maximum residual ripple:	10%
AC consumption:	< 5 VA
DC consumption:	< 2.5 W

Control circuit

Protection against short circuits:	resistance PTC, Ih=0.5 A
PTC intervention timing:	intervention > 100 ms, reset > 3 s
Maximum input resistance:	≤ 50 Ω
Input current:	< 40 mA
Min. duration of start impulse t_{MIN}:	> 50 ms
Operating time t_A:	< 120 ms
Releasing time t_{R1}:	< 15 ms
Releasing time in absence of power supply t_R:	< 65 ms
Simultaneity time t_C:	infinite

Operating time from power supply switch on: < 300 ms

Auxiliary signalling circuit

Auxiliary output (Y43-Y44):	1NO opto-decoupled
Rated operating voltage (Ue):	24 Vdc
Rated operating current (Ie):	25 mA
Rated impulse withstand voltage (Uimp):	4 kV
Releasing time t_{R2}:	< 1 ms

In conformity with standards:
EN 60204-1, EN ISO 13855, EN 1037, EN ISO 12100, EN ISO 13850, EN 60529, EN 61000-6-2, EN 61000-6-3, EN 62326-1, EN 60664-1, EN 60947-1, EN ISO 13849-1, EN ISO 13849-2, EN 62061, UL 508, CSA C22.2 n° 14-95

Output circuit

Output contacts:	2 NO safety contacts,
Contact type:	forcibly guided
Contact material:	gold-plated silver alloy
Maximum switching voltage:	230/240 Vac; 300 Vdc
Max. current per contact:	6 A
Conventional free air thermal current Ith:	6 A
Max. total current Σ Ith^2:	36 A^2
Minimum current:	10 mA
Contact resistance:	≤ 100 mΩ
External protection fuse:	4 A type F

The number and the load capacity of output contacts can be increased by using expansion modules or contactors. See pages 231-240.

Code structure

CS AR-91V024

Connection type	
V	screw terminals
M	connector with screw terminals
X	connector with spring terminals

Supply voltage		
024	24 Vac/dc	±15%

Characteristics approved by UL

Rated supply voltage (Un):	24 Vac/dc; 50...60 Hz
AC consumption:	< 5 VA
DC consumption:	< 2.5 W
Maximum switching voltage:	230 Vac
Max. current per contact:	6 A
Utilization category	C300

Notes:
- Use 60° or 75 °C copper (Cu) conductor, rigid or flexible, wire size AWG 30-12.
- Terminal tightening torque of 5-7 Lb In.
- Only for 24 Vac/dc version, supply from remote class 2 source or limited voltage and limited energy. (Supply from Remote Class 2 Source or limited voltage limited energy).

Safety module CS AR-91

Terminal layout

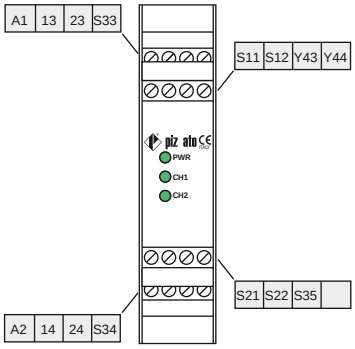

Voltage dips, short interruptions and voltage variations

The CS AR-91 safety module has a built-in voltage drop sensor which serves to protect and safeguard the internal state of the safety relays, in the event of dips or short voltage interruptions. This is to prevent unwanted switching states in relation to the state of the inputs from occurring. When the input voltage is restored, the equipment always starts correctly and consistently with the inputs state. With brief voltage dips and interruptions, the safety module maintains its normal performance, while with longer voltage interruptions the safety outputs open which, along with the automatic start, are restored when the voltage is restored. With manual or monitored start, the operator will need to carry out a system reset.

Operation diagrams

Configuration with automatic start

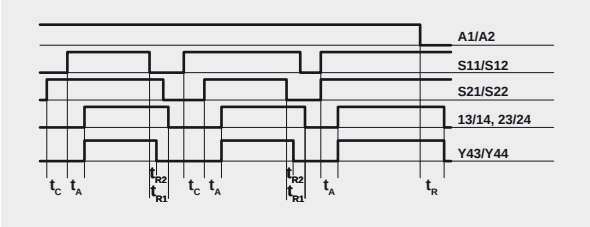

Configuration with monitored start

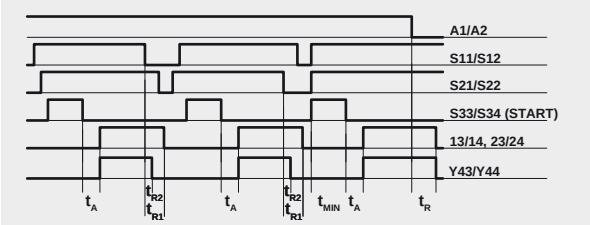

Configuration with manual start

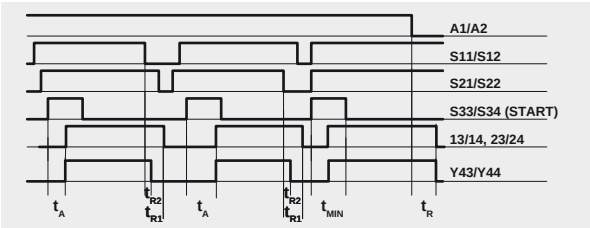

Legend:

t_{MIN}: min. duration of start impulse
t_C: simultaneity time
t_A: operating time
t_{R1}: releasing time
t_R: releasing time in absence of power supply

Notes:
The configurations with one channel are obtained taking into consideration only the S11/S12 input. In this case it is necessary to consider time t_{R1} referred to input S11/S12, time t_R referred to the supply, time t_A referred to input S11/S12 and to the start, and time t_{MIN} referred to the start.

Internal diagram

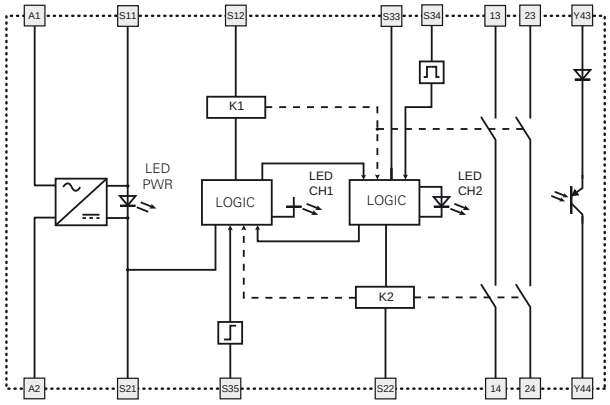

Input configuration

Input configuration with magnetic sensors
2 channels

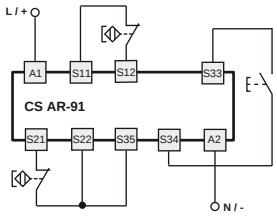

The diagram does not show the exact position of terminals in the product

Automatic start

With regard to the indicated diagrams, bridge the start button between S33 and S34 in order to activate the automatic start module.

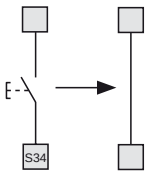

Monitored start

With regard to the indicated diagrams, it is necessary to remove the connection between S22 and S35 in order to activate the monitored start module.

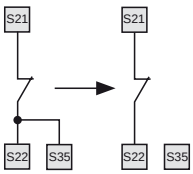

Movable guard monitoring and magnetic safety sensors

The safety module can control emergency stop circuits, movable guard monitoring circuits or magnetic safety sensors. Replace the emergency stop contacts with switch contacts or sensor contacts.
The sensors can only be used in 2-channel configuration.

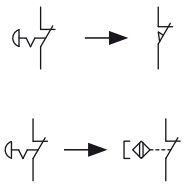

Application examples See page 241

Safety module **CS AR-51**

Module for emergency stop, gate monitoring, safety mats and safety bumpers with 4-wire technology

Main features
- For safety applications up to SIL CL 3/PL e
- Dual channel input circuit
- Choice between automatic start, manual start or monitored start
- Connection of the input channels to opposite potentials
- Can be connected to electromechanical contacts, safety mats or safety bumpers with 4-wire technology
- Output contacts: 2 NO safety contacts,
- Supply voltage: 24 Vac/dc

Utilization categories
Alternating current: AC15 (50...60 Hz)
Ue (V) 230
Ie (A) 3
Direct current: DC13 (6 op. cycles/minute)
Ue (V) 24
Ie (A) 4

Markings, quality marks and certificates:

UL approval:	E131787
EAC approval:	RU C-IT ДМ94.B.01024
CCC approval:	2013010305640211

In conformity with the requirements of:
Low Voltage Directive 2006/95/EC,
Machinery Directive 2006/42/EC,
EMC Directive 2004/108/EC

Technical data

Housing
PA 6.6 polyamide housing, self-extinguishing, V0 acc. to UL 94

Protection degree:	IP40 (housing), IP20 (terminal strip)
Dimensions:	see page 283, design A

General data

SIL CL:	up to SIL CL 3 acc. to EN 62061
Performance Level (PL):	up to PL e acc. to EN ISO 13849-1
Safety category:	up to cat. 4 acc. to EN ISO 13849-1
Safety parameters:	see page 333
Ambient temperature:	-25°C...+55°C
Mechanical endurance:	>10 million operating cycles
Electrical endurance:	>100,000 operating cycles
Pollution degree:	external 3, internal 2
Impulse voltage (Uimp):	4 kV
Rated insulation voltage (Ui):	250 V
Overvoltage category:	II
Weight:	0.3 kg

Supply

Rated supply voltage (Un):	24 Vac/dc; 50...60 Hz
DC maximum residual ripple:	10%
Supply voltage tolerance:	±15% of Un
AC consumption:	< 5 VA
DC consumption:	< 2.5 W

Control circuit

Protection against short circuits:	resistance PTC, Ih=0.5 A
PTC timing:	intervention > 100 ms, reset > 3 s
Maximum input resistance:	≤ 200 Ω
Input current:	< 10 mA
Min. duration of start impulse t_{MIN}:	> 150 ms
Operating time t_A:	< 120 ms
Releasing time t_{R1}:	< 15 ms
Releasing time in absence of power supply t_R:	< 100 ms
Simultaneity time t_C:	infinite

In conformity with standards:
EN 60204-1, EN ISO 13855, EN 1037, EN ISO 12100, EN ISO 13850, EN 60529, EN 61000-6-2, EN 61000-6-3, EN 62326-1, EN 60664-1, EN 60947-1, EN ISO 13849-1, EN ISO 13849-2, EN 62061, UL 508, CSA C22.2 n° 14-95

Output circuit

Output contacts:	2 NO safety contacts
Contact type:	forcibly guided
Contact material:	gold-plated silver alloy
Maximum switching voltage:	230/240 Vac; 300 Vdc
Max. current per contact:	6 A
Conventional free air thermal current Ith:	6 A
Max. total current Σ Ith^2:	36 A^2
Minimum current:	10 mA
Contact resistance:	≤ 100 mΩ
External protection fuse:	4 A

The number and the load capacity of output contacts can be increased by using expansion modules or contactors. See pages 231-240.

Code structure

CS AR-51V024

Connection type	
V	screw terminals
M	connector with screw terminals
X	connector with spring terminals

Supply voltage		
024	24 Vac/dc	±15%

Characteristics approved by UL

Rated supply voltage (Un):	24 Vac/dc; 50...60 Hz
AC consumption:	< 5 VA
DC consumption:	< 2 W
Maximum switching voltage:	230 Vac
Max. current per contact:	6 A
Utilization category	C300

Notes:
- Use 60° or 75 °C copper (Cu) conductor, rigid or flexible, wire size AWG 30-12.
- Terminal tightening torque of 5-7 Lb In.
- Only for 24 Vac/dc version, supply from remote class 2 source or limited voltage and limited energy. (Supply from Remote Class 2 Source or limited voltage limited energy).

Safety module CS AR-51

Terminal layout

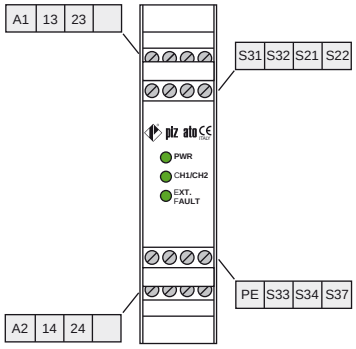

PE terminal connection
The PE terminal has to be connected to the equipotential circuit of machine protection if it is necessary.
This connection is made for functional reason, to reduce effects of an insulation fault on the machine operation.
In particular, faults towards ground on control circuits must not cause an unwanted starting, either dangerous movements or obstruct the machine stop.

"EXT. FAULT" LED function
When a pressure is exerted on surfaces of a bumper or a safety mat or a bumper, we obtain a short-circuit between the two conductive elements which form the device and are connected to the entry channels of the safety module.

The produced signal cause the LED EXT.FAULT lighting to signal the short-circuit between channels and the output contacts opening, which produce the block of the control circuit and the safety setting of the machine. The EXT. FAULT LED does not activate in the case of wires or internal connection interruption of safety mat or bumper.

Operation diagrams

Configuration with automatic start

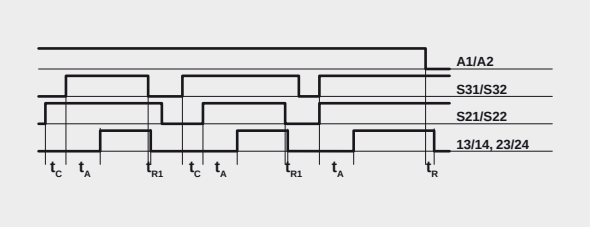

Configuration with monitored start

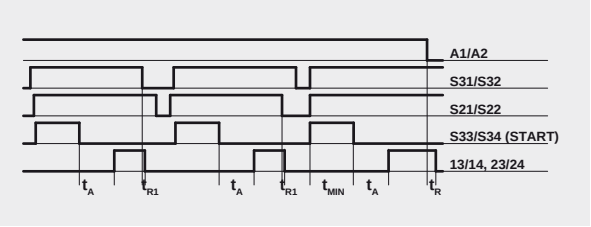

Configuration with manual start

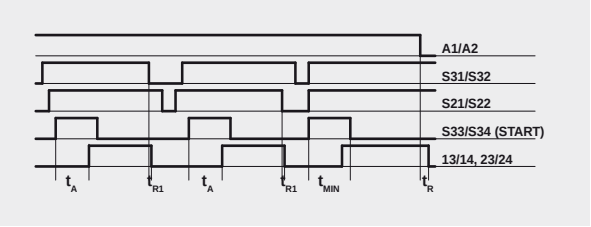

Legend:
t_{MIN}: min. duration of start impulse
t_C: simultaneity time
t_A: operating time
t_{R1}: releasing time
t_R: releasing time in absence of power supply

Internal diagram

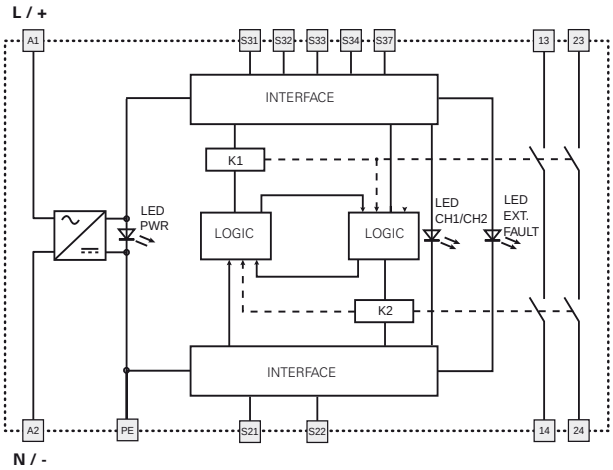

Input configuration

Safety mats and safety bumpers
Input configuration with manual start
2 channels

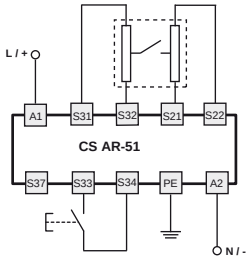

Emergency stop circuits
Input configuration with manual start
2 channels

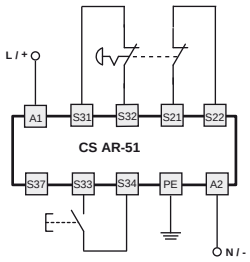

Automatic start

With regard to the indicated diagrams, bridge the start button between S33 and S34 in order to activate the automatic start module.

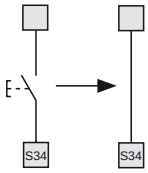

Monitored start

As regards the indicated diagrams, in order to activate the module with the monitored start, it is necessary to add the connection between S34 and S37 terminals.

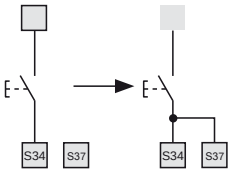

Movable guard monitoring

The safety module can control emergency stop circuits or movable guard monitoring circuits. Replace the emergency stop contacts with the switch contacts.

The diagram does not show the exact position of terminals in the product

Safety module **CS AT-0**

Module, with delayed contacts at the opening of the input channels, for emergency stop, gate monitoring, solid-state output circuits (e.g. light curtains) and magnetic safety sensors

Main features
- For safety applications up to SIL CL 3/PL e
- Input with 1 or 2 channels
- Choice between automatic start, manual start or monitored start
- Connection of the input channels to opposite potentials
- Can be connected to solid-state output circuits (e.g. light curtains), to electromechanical contacts or to magnetic safety sensors
- 45 mm housing
- 2 NO instantaneous safety contacts, 1 NC auxiliary contact, instantaneous, 2 NO safety contacts, delayed.
- Supply voltage: 24 Vac/dc, 120 Vac, 230 Vac

Utilization categories
Alternating current: AC15 (50...60 Hz)
Ue (V) 230
Ie (A) 3
Direct current: DC13 (6 op. cycles/minute)
Ue (V) 24
Ie (A) 4

Markings, quality marks and certificates:

UL approval:	E131787
EAC approval:	RU C-IT ДМ94.В.01024
CCC approval:	2013010305640211

In conformity with the requirements of:
Low Voltage Directive 2006/95/EC,
Machinery Directive 2006/42/EC,
EMC Directive 2004/108/EC

Technical data

Housing
PA 6.6 polyamide housing, self-extinguishing, V0 acc. to UL 94

Protection degree:	IP40 (housing), IP20 (terminal strip)
Dimensions:	see page 284, design C

General data

SIL CL:	up to SIL CL 3 acc. to EN 62061
Performance Level (PL):	up to PL e acc. to EN ISO 13849-1
Safety category:	up to category 4 (instantaneous contacts), category 3 (delayed contacts) acc. to EN ISO 13849-1
Safety parameters:	see page 333
Ambient temperature:	-25°C...+55°C
Mechanical endurance:	>10 million operating cycles
Electrical endurance:	>100,000 operating cycles
Pollution degree:	external 3, internal 2
Impulse voltage (Uimp):	4 kV
Rated insulation voltage (Ui):	250 V
Overvoltage category:	II
Weight:	0.5 kg

Supply

Rated supply voltage (Un):	24 Vac/dc; 50...60 Hz 120 Vac; 50…60 Hz 230 Vac; 50…60 Hz
DC maximum residual ripple:	10%
Supply voltage tolerance:	±15% of Un
AC consumption:	< 10 VA
DC consumption:	< 5 W

Control circuit

Protection against short circuits:	resistance PTC, Ih=0.5 A
PTC timing:	intervention > 100 ms, reset > 3 s
Maximum input resistance:	≤ 50 Ω
Input current:	< 30 mA
Min. duration of start impulse t_{MIN}:	> 200 ms
Operating time t_A:	< 150 ms
Releasing time t_{R1}:	< 20 ms
Releasing time in absence of power supply t_R:	< 150 ms
Releasing time, delayed contacts t_{R2}:	see "Code structure"
Simultaneity time t_C:	infinite

In conformity with standards:
EN 60204-1, EN ISO 13855, EN 1037, EN ISO 12100, EN ISO 13850, EN 60529, EN 61000-6-2, EN 61000-6-3, EN 62326-1, EN 60664-1, EN 60947-1, EN ISO 13849-1, EN ISO 13849-2, EN 62061, UL 508, CSA C22.2 n° 14-95

Output circuit

Output contacts:	2 NO instantaneous safety contacts, 1 NC auxiliary contact, instantaneous, 2 NO safety contacts, delayed.
Contact type:	forcibly guided
Contact material:	gold-plated silver alloy
Maximum switching voltage:	230/240 Vac; 300 Vdc
Max. current per contact:	6 A
Conventional free air thermal current Ith:	6 A
Max. total current Σ Ith^2:	72 (instantaneous), 36 (delayed) A^2
Minimum current:	10 mA
Contact resistance:	≤ 100 mΩ
External protection fuse:	4 A

The number and the load capacity of output contacts can be increased by using expansion modules or contactors. See pages 231-240.

Code structure

CS AT-00V024-TF1

Releasing time, delayed contacts (t_{R2})	
0	Fixed time (see TF)
1	from 0.3 to 3 s, step 0.3 s
2	from 1 to 10 s, step 1 s
3	from 3 to 30 s, step 3 s
4	from 30 to 300 s, step 30 s

Connection type	
V	screw terminals
M	connector with screw terminals
X	connector with spring terminals

Supply voltage		
024	24 Vac/dc	±15%
120	120 Vac	±15%
230	230 Vac	±15%

Releasing time, delayed contacts (t_{R2})	
TF0.5	0.5 s fixed time
TF1	1 s fixed time
TF3	3 s fixed time
...	.....

Characteristics approved by UL

Rated supply voltage (Un):	24 Vac/dc; 50...60 Hz 120 Vac; 50…60 Hz 230 Vac; 50…60 Hz
AC consumption:	< 10 VA
DC consumption:	< 4 W
Maximum switching voltage:	230 Vac
Max. current per contact:	6 A
Utilization category	C300

Notes:
- Use 60° or 75 °C copper (Cu) conductor, rigid or flexible, wire size AWG 30-12.
- Terminal tightening torque of 5-7 Lb In.
- Only for 24 Vac/dc version, supply from remote class 2 source or limited voltage and limited energy. (Supply from Remote Class 2 Source or limited voltage limited energy).

Safety module CS AT-0

Terminal layout

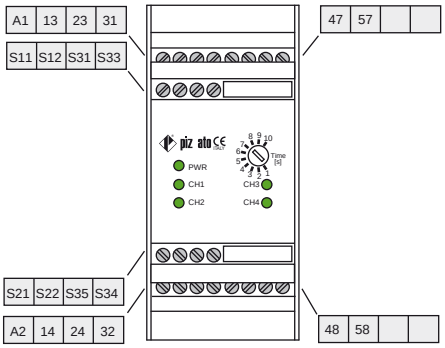

Internal diagram

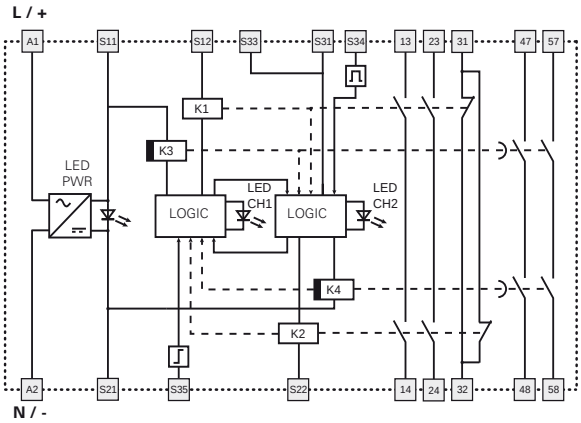

Operation diagrams

Configuration with automatic start

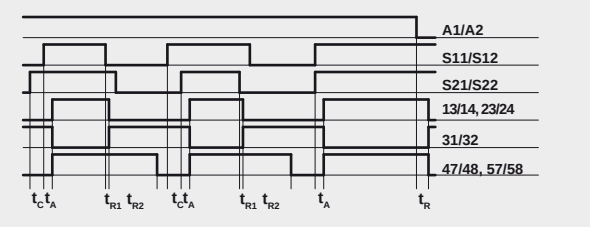

Configuration with monitored start

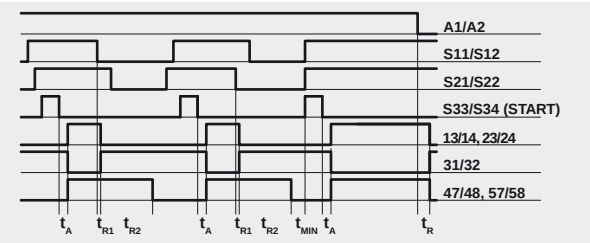

Configuration with manual start

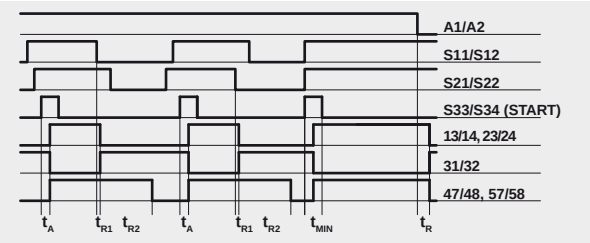

Legend:

- t_{MIN}: min. duration of start impulse
- t_C: simultaneity time
- t_A: operating time
- t_{R1}: releasing time
- t_R: releasing time in absence of power supply
- t_{R2}: releasing time, delayed contacts adjustable (see "Code structure")

Notes:
The configurations with one channel are obtained taking into consideration only the S11/S12 input. In this case it is necessary to consider time t_{R1} and t_{R2} referred to input S11/S12, time t_R referred to the supply, time t_A referred to input S11/S12 and to the start, and time t_{MIN} referred to the start.

Input configuration

Solid state output circuits (e.g. light curtains)

Input configuration with manual start

1 channel

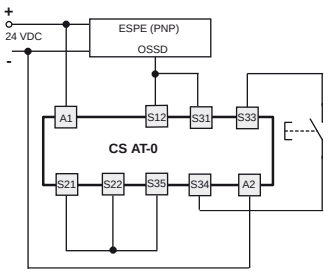

2 channels

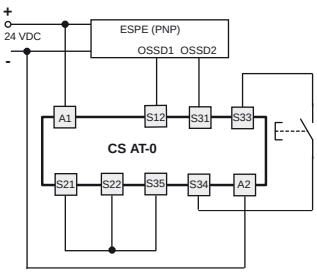

Emergency stop circuits

Input configuration with manual start

1 channel

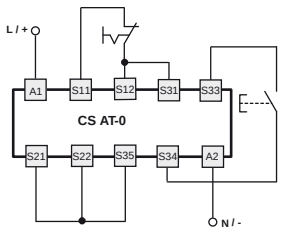

2 channels

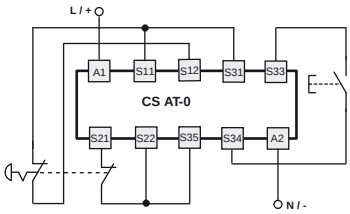

Automatic start

With regard to the indicated diagrams, bridge the start button between S33 and S34 in order to activate the automatic start module.

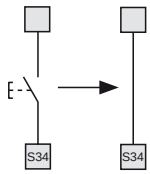

Monitored start

With regard to the indicated diagrams, it is necessary to remove the connection between S22 and S35 in order to activate the monitored start module.

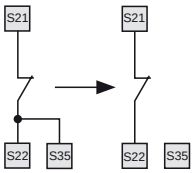

Movable guard monitoring and magnetic safety sensors

The safety module can control emergency stop circuits, movable guard monitoring circuits or magnetic safety sensors. Replace the emergency stop contacts with switch contacts or sensor contacts.
The sensors can only be used in 2-channel configuration.

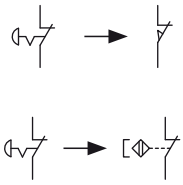

Application examples See page 241

Safety module **CS AT-1**

Module, with delayed contacts at the opening of the input channels, for emergency stop, gate monitoring, solid-state output circuits (e.g. light curtains) and magnetic safety sensors

Main features
- For safety applications up to SIL CL 3/PL e
- Input with 1 or 2 channels
- Choice between automatic start, manual start or monitored start
- Connection of the input channels to opposite potentials
- Can be connected to solid-state output circuits (e.g. light curtains), to electromechanical contacts or to magnetic safety sensors
- 45 mm housing
- 3 NO instantaneous safety contacts, 2 NO safety contacts, delayed.
- Supply voltage: 24 Vac/dc, 120 Vac, 230 Vac

Utilization categories
Alternating current: AC15 (50...60 Hz)
Ue (V) 230
Ie (A) 3
Direct current: DC13 (6 op. cycles/minute)
Ue (V) 24
Ie (A) 4

Markings, quality marks and certificates:

UL approval:	E131787
EAC approval:	RU C-IT ДМ94.В.01024
CCC approval:	2013010305640211

In conformity with the requirements of:
Low Voltage Directive 2006/95/EC,
Machinery Directive 2006/42/EC,
EMC Directive 2004/108/EC

Technical data

Housing
PA 6.6 polyamide housing, self-extinguishing, V0 acc. to UL 94

Protection degree:	IP40 (housing), IP20 (terminal strip)
Dimensions:	see page 284, design C

General data

SIL CL:	up to SIL CL 3 acc. to EN 62061
Performance Level (PL):	up to PL e acc. to EN ISO 13849-1
Safety category:	up to category 4 (instantaneous contacts), category 3 (delayed contacts) acc. to EN ISO 13849-1
Safety parameters:	see page 333
Ambient temperature:	-25°C...+55°C
Mechanical endurance:	>10 million operating cycles
Electrical endurance:	>100,000 operating cycles
Pollution degree:	external 3, internal 2
Impulse voltage (Uimp):	4 kV
Rated insulation voltage (Ui):	250 V
Overvoltage category:	II
Weight:	0.5 kg

Supply

Rated supply voltage (Un):	24 Vac/dc; 50...60 Hz 120 Vac; 50…60 Hz 230 Vac; 50…60 Hz
DC maximum residual ripple:	10%
Supply voltage tolerance:	±15% of Un
AC consumption:	< 10 VA
DC consumption:	< 5 W

Control circuit

Protection against short circuits:	resistance PTC, Ih=0.5 A
PTC timing:	intervention > 100 ms, reset > 3 s
Maximum input resistance:	≤ 50 Ω
Input current:	< 30 mA
Min. duration of start impulse t_{MIN}:	> 200 ms
Operating time t_A:	< 150 ms
Releasing time t_{R1}:	< 20 ms
Releasing time in absence of power supply t_R:	< 150 ms
Releasing time, delayed contacts t_{R2}:	see "Code structure"
Simultaneity time t_C:	infinite

In conformity with standards:
EN 60204-1, EN ISO 13855, EN 1037, EN ISO 12100, EN ISO 13850, EN 60529, EN 61000-6-2, EN 61000-6-3, EN 62326-1, EN 60664-1, EN 60947-1, EN ISO 13849-1, EN ISO 13849-2, EN 62061, UL 508, CSA C22.2 n° 14-95

Output circuit

Output contacts:	3 NO instantaneous safety contacts, 2 NO safety contacts, delayed.
Contact type:	forcibly guided
Contact material:	gold-plated silver alloy
Maximum switching voltage:	230/240 Vac; 300 Vdc
Max. current per contact:	6 A
Conventional free air thermal current Ith:	6 A
Max. total current Σ Ith^2:	72 (instantaneous), 36 (delayed) A^2
Minimum current:	10 mA
Contact resistance:	≤ 100 mΩ
External protection fuse:	4 A

The number and the load capacity of output contacts can be increased by using expansion modules or contactors. See pages 231-240.

Code structure

CS AT-10V024-TF1

Releasing time, delayed contacts (t_{R2})	
0	Fixed time (see TF)
1	from 0.3 to 3 s, step 0.3 s
2	from 1 to 10 s, step 1 s
3	from 3 to 30 s, step 3 s
4	from 30 to 300 s, step 30 s

Connection type	
V	screw terminals
M	connector with screw terminals
X	connector with spring terminals

Supply voltage		
024	24 Vac/dc	±15%
120	120 Vac	±15%
230	230 Vac	±15%

Releasing time, delayed contacts (t_{R2})	
TF0.5	0.5 s fixed time
TF1	1 s fixed time
TF3	3 s fixed time
...	.....

Characteristics approved by UL

Rated supply voltage (Un):	24 Vac/dc; 50...60 Hz 120 Vac; 50…60 Hz 230 Vac; 50…60 Hz
AC consumption:	< 10 VA
DC consumption:	< 4 W
Maximum switching voltage:	230 Vac
Max. current per contact:	6 A
Utilization category	C300

Notes:
- Use 60° or 75 °C copper (Cu) conductor, rigid or flexible, wire size AWG 30-12.
- Terminal tightening torque of 5-7 Lb In.
- Only for 24 Vac/dc version, supply from remote class 2 source or limited voltage and limited energy. (Supply from Remote Class 2 Source or limited voltage limited energy).

Safety module CS AT-1

Terminal layout

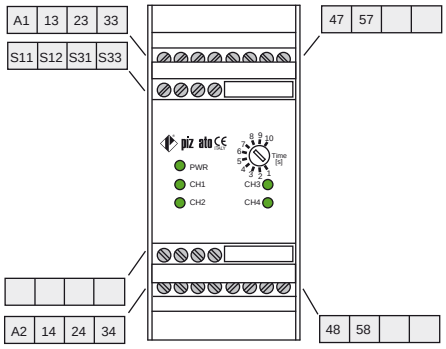

Operation diagrams

Configuration with automatic start

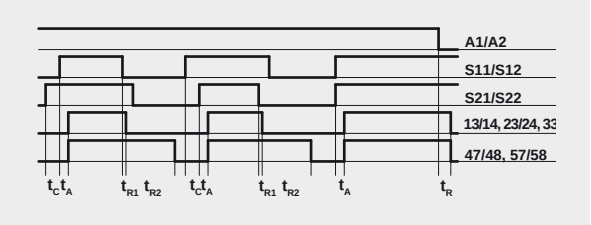

Configuration with monitored start

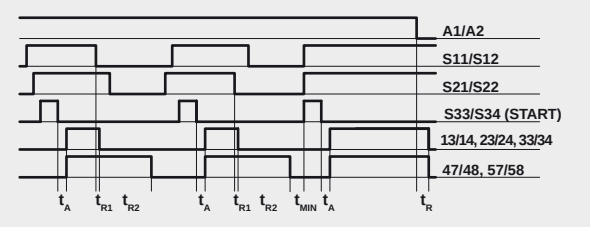

Internal diagram

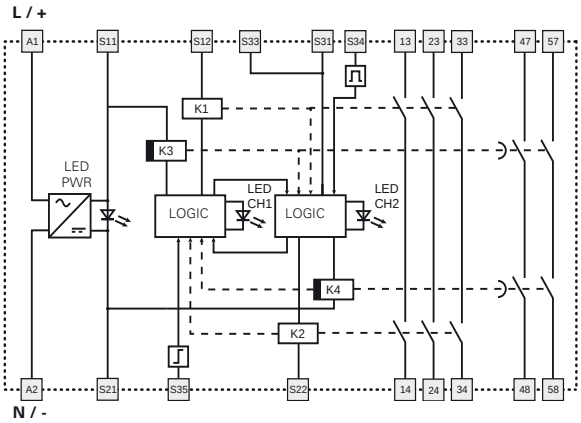

Configuration with manual start

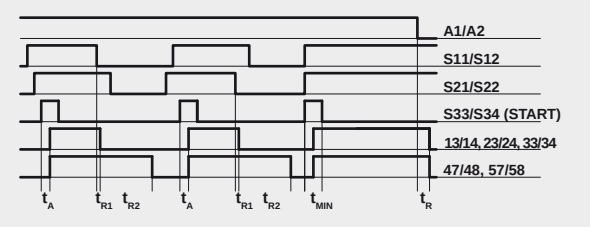

Legend:

- t_{MIN}: min. duration of start impulse
- t_C: simultaneity time
- t_A: operating time
- t_{R1}: releasing time
- t_R: releasing time in absence of power supply
- t_{R2}: releasing time, delayed contacts adjustable (see "Code structure")

Notes:
The configurations with one channel are obtained taking into consideration only the S11/S12 input. In this case it is necessary to consider time t_{R1} and t_{R2} referred to input S11/S12, time t_R referred to the supply, time t_A referred to input S11/S12 and to the start, and time t_{MIN} referred to the start.

Input configuration

Solid state output circuits (e.g. light curtains)

Input configuration with manual start

1 channel

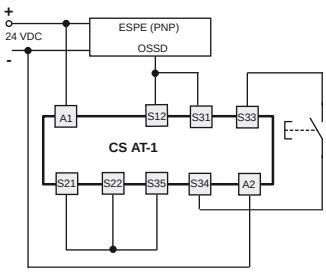

2 channels

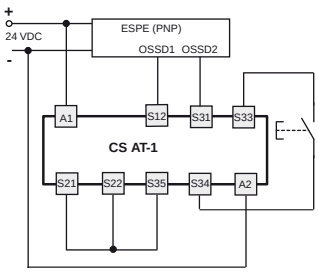

Emergency stop circuits

Input configuration with manual start

1 channel

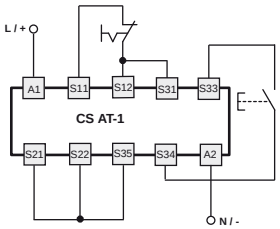

2 channels

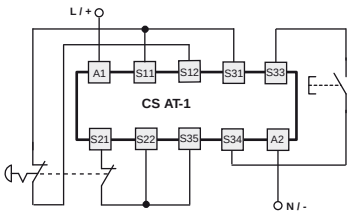

Automatic start

With regard to the indicated diagrams, bridge the start button between S33 and S34 in order to activate the automatic start module.

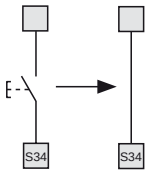

Monitored start

With regard to the indicated diagrams, it is necessary to remove the connection between S22 and S35 in order to activate the monitored start module.

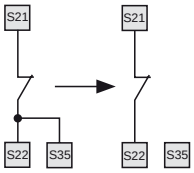

Movable guard monitoring and magnetic safety sensors

The safety module can control emergency stop circuits, movable guard monitoring circuits or magnetic safety sensors. Replace the emergency stop contacts with switch contacts or sensor contacts.
The sensors can only be used in 2-channel configuration.

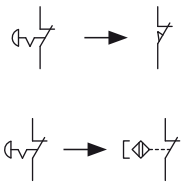

Application examples See page 241

Safety module **CS AT-3**

Module for emergency stop and gate monitoring for movable guards with delayed contacts at the opening of the input channels and magnetic safety sensors

Main features
- For safety applications up to SIL CL 3/PL e
- Input with 1 or 2 channels
- Choice between automatic start, manual start or monitored start
- Connectible to electromechanical contacts or to magnetic safety sensor
- 45 mm housing
- 2 NO instantaneous safety contacts, 1 NO safety contact, delayed.
- Supply voltage: 24 Vac/dc

Utilization categories
Alternating current: AC15 (50...60 Hz)
Ue (V) 230
Ie (A) 3
Direct current: DC13 (6 op. cycles/minute)
Ue (V) 24
Ie (A) 4

Markings, quality marks and certificates:

UL approval:	E131787
EAC approval:	RU C-IT ДМ94.В.01024
CCC approval:	2013010305640211

In conformity with the requirements of:
Low Voltage Directive 2006/95/EC,
Machinery Directive 2006/42/EC,
EMC Directive 2004/108/EC

Technical data

Housing
PA 6.6 polyamide housing, self-extinguishing, V0 acc. to UL 94

Protection degree:	IP40 (housing), IP20 (terminal strip)
Dimensions:	see page 284, design C

General data

SIL CL:	up to SIL CL 3 acc. to EN 62061
Performance Level (PL):	up to PL e acc. to EN ISO 13849-1
Safety category:	up to category 4 (instantaneous contacts) category 3 (delayed contacts) acc. to EN ISO 13849-1
Safety parameters:	see page 333
Ambient temperature:	-25°C...+55°C
Mechanical endurance:	>10 million operating cycles
Electrical endurance:	>100,000 operating cycles
Pollution degree:	external 3, internal 2
Impulse voltage (Uimp):	2.5 kV
Rated insulation voltage (Ui):	250 V
Overvoltage category:	II
Weight:	0.3 kg

Supply

Rated supply voltage (Un):	24 Vac/dc; 50...60 Hz
DC maximum residual ripple:	10%
Supply voltage tolerance:	±15% of Un
AC consumption:	< 10 VA
DC consumption:	< 5 W

Control circuit

Protection against short circuits:	resistance PTC, Ih=0.5 A
PTC timing:	intervention > 100 ms, reset > 3 s
Maximum input resistance:	≤ 50 Ω
Input current:	< 30 mA
Min. duration of start impulse t_{MIN}:	> 100 ms
Operating time t_A:	< 70 ms
Releasing time t_{R1}:	< 15 ms
Releasing time in absence of power supply t_R:	< 100 ms
Releasing time, delayed contacts t_{R2}:	see "Code structure"
Simultaneity time t_C:	infinite

In conformity with standards:
EN 60204-1, EN ISO 13855, EN 1037, EN ISO 12100, EN ISO 13850, EN 60529, EN 61000-6-2, EN 61000-6-3, EN 62326-1, EN 60664-1, EN 60947-1, EN ISO 13849-1, EN ISO 13849-2, EN 62061, UL 508, CSA C22.2 n° 14-95

Output circuit

Output contacts:	2 NO instantaneous safety contacts, 1 NO safety contact, delayed.
Contact type:	forcibly guided
Contact material:	gold-plated silver alloy
Maximum switching voltage:	230/240 Vac; 300 Vdc
Max. current per contact:	6 A
Conventional free air thermal current Ith:	6 A
Max. total current Σ Ith^2:	36 A^2
Minimum current:	10 mA
Contact resistance:	≤ 100 mΩ
External protection fuse:	4 A

The number and the load capacity of output contacts can be increased by using expansion modules or contactors. See pages 231-240.

Code structure

CS AT-30V024-TF1

Releasing time, delayed contacts (t_{R2})	
0	Fixed time (see TF)
1	from 0.3 to 3 s, step 0.3 s
2	from 1 to 10 s, step 1 s
3	from 3 to 30 s, step 3 s
4	from 30 to 300 s, step 30 s

Connection type	
V	screw terminals
M	connector with screw terminals
X	connector with spring terminals

Supply voltage		
024	24 Vac/dc	±15%

Releasing time, delayed contacts (t_{R2})	
TF0.5	0.5 s fixed time
TF1	1 s fixed time
TF3	3 s fixed time
...	.....

Characteristics approved by UL

Rated supply voltage (Un):	24 Vac/dc; 50...60 Hz
AC consumption:	< 10 VA
DC consumption:	< 4 W
Maximum switching voltage:	230 Vac
Max. current per contact:	6 A
Utilization category	C300

Notes:
- Use 60° or 75 °C copper (Cu) conductor, rigid or flexible, wire size AWG 30-12.
- Terminal tightening torque of 5-7 Lb In.
- Only for 24 Vac/dc version, supply from remote class 2 source or limited voltage and limited energy. (Supply from Remote Class 2 Source or limited voltage limited energy).

Safety module CS AT-3

Terminal layout

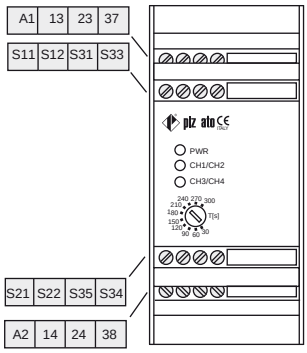

Internal diagram

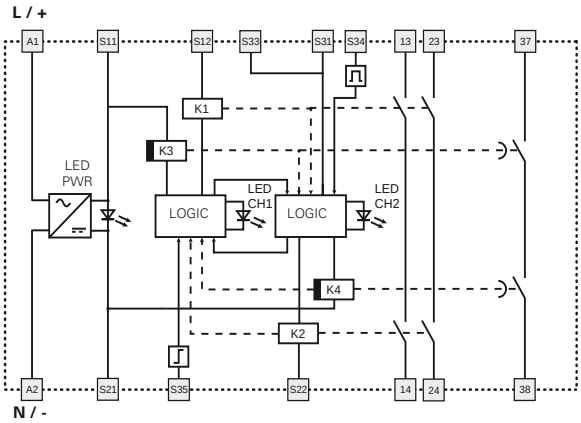

Operation diagrams

Configuration with automatic start

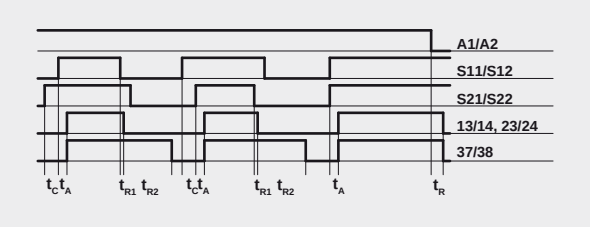

Configuration with monitored start

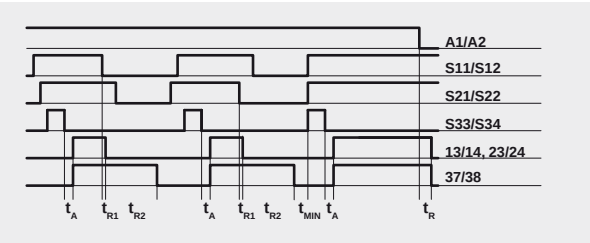

Configuration with manual start

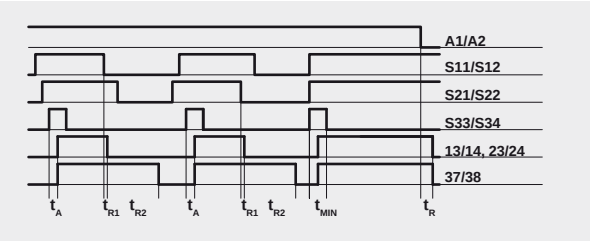

Legend:

- t_{MIN}: min. duration of start impulse
- t_C: simultaneity time
- t_A: operating time
- t_{R1}: releasing time
- t_R: releasing time in absence of power supply
- t_{R2}: releasing time, delayed contacts adjustable (see "Code structure")

Notes:
The configurations with one channel are obtained taking into consideration only the S11/S12 input. In this case it is necessary to consider time t_{R1} and t_{R2} referred to input S11/S12, time t_R referred to the supply, time t_A referred to input S11/S12 and to the start, and time t_{MIN} referred to the start.

Input configuration

Emergency stop circuits	
Input configuration with manual start	
1 channel	2 channels

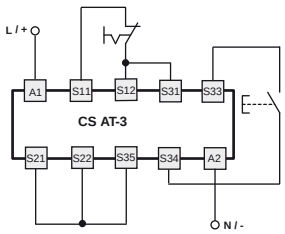

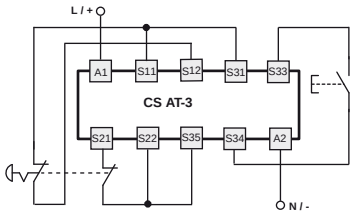

The diagram does not show the exact position of terminals in the product

Automatic start

With regard to the indicated diagrams, bridge the start button between S33 and S34 in order to activate the automatic start module.

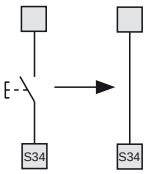

Monitored start

With regard to the indicated diagrams, it is necessary to remove the connection between S22 and S35 in order to activate the monitored start module.

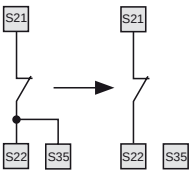

Movable guard monitoring and magnetic safety sensors

The safety module can control emergency stop circuits, movable guard monitoring circuits or magnetic safety sensors. Replace the emergency stop contacts with switch contacts or sensor contacts. **The sensors can only be used in 2-channel configuration.**

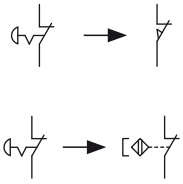

The diagram does not show the exact position of terminals in the product

Application examples See page 241

Safety module **CS FS-1**

Safety timer module with delayed contacts at energizing

Main features
- For safety applications up to SIL CL 3/PL e
- Timed circuits through safety system with self-monitoring and redundancy
- Suitable to control safety interlocked devices
- 45 mm housing
- Output contacts:
  1 NO safety contact,
  2 NC auxiliary contacts
- Supply voltage:
  24 Vac/dc, 120 Vac, 230 Vac

Utilization categories
Alternating current: AC15 (50...60 Hz)
Ue (V) 230
Ie (A) 3
Direct current: DC13 (6 op. cycles/minute)
Ue (V) 24
Ie (A) 4

Markings, quality marks and certificates:

UL approval:	E131787
EAC approval:	RU C-IT ДМ94.B.01024
CCC approval:	2013010305640211

In conformity with the requirements of:
Low Voltage Directive 2006/95/EC,
Machinery Directive 2006/42/EC,
EMC Directive 2004/108/EC

Technical data

Housing
PA 6.6 polyamide housing, self-extinguishing, V0 acc. to UL 94

Protection degree:	IP40 (housing), IP20 (terminal strip)
Dimensions:	see page 284, design C

General data

SIL CL:	up to SIL CL 3 acc. to EN 62061
Performance Level (PL):	up to PL e acc. to EN ISO 13849-1
Safety category:	up to cat. 4 acc. to EN ISO 13849-1 (depending on circuit structure)
Safety parameters:	see page 333
Ambient temperature:	-25°C...+55°C
Mechanical endurance:	>10 million operating cycles
Electrical endurance:	>100,000 operating cycles
Pollution degree:	external 3, internal 2
Impulse voltage (Uimp):	2.5 kV
Rated insulation voltage (Ui):	250 V
Overvoltage category:	II
Weight:	0.2 kg

Supply

Rated supply voltage (Un):	24 Vac/dc; 50...60 Hz 120 Vac; 50…60 Hz 230 Vac; 50…60 Hz
DC maximum residual ripple:	10%
Supply voltage tolerance:	±15% of Un
AC consumption:	< 5 VA
DC consumption:	< 2 W

Control circuit

Protection against short circuits:	resistance PTC, Ih=0.5 A
PTC timing:	intervention > 100 ms, reset > 3 s
Operating time t_A:	see "Code structure"
Releasing time in absence of power supply t_R:	< 40 ms

In conformity with standards:
EN 60204-1, EN ISO 13855, EN 1037, EN ISO 12100, EN ISO 13850, EN 60529, EN 61000-6-2, EN 61000-6-3, EN 62326-1, EN 60664-1, EN 60947-1, EN ISO 13849-1, EN ISO 13849-2, EN 62061, UL 508, CSA C22.2 n° 14-95

Output circuit

Output contacts:	1 NO safety contact, 2 NC auxiliary contacts
Contact type:	forcibly guided
Contact material:	silver alloy
Maximum switching voltage:	230/240 Vac; 300 Vdc
Max. current per contact:	6 A
Conventional free air thermal current Ith:	6 A
Max. total current Σ Ith^2:	36 A^2
Minimum current:	10 mA
Contact resistance:	≤ 100 mΩ
External protection fuse:	4 A

The number and the load capacity of output contacts can be increased by using expansion modules or contactors. See pages 231-240.

Code structure

CS FS-11V024-TF1

Operating time (t_A)	
0	Fixed time (see TFx)
1	from 0.3 to 3 s, step 0.3 s
2	from 1 to 10 s, step 1 s
3	from 3 to 30 s, step 3 s
4	from 30 to 300 s, step 30 s

Connection type	
V	screw terminals
M	connector with screw terminals
X	connector with spring terminals

Supply voltage		
024	24 Vac/dc	±15%
120	120 Vac	±15%
230	230 Vac	±15%

Operating time (t_A)	
TF0.5	0.5 s fixed time
TF1	1 s fixed time
TF3	3 s fixed time
TF10	10 s fixed time

Characteristics approved by UL

Rated supply voltage (Un):	24 Vac/dc; 50...60 Hz 120 Vac; 50…60 Hz 230 Vac; 50…60 Hz
AC consumption:	< 5 VA
DC consumption:	< 2 W
Maximum switching voltage:	230 Vac
Max. current per contact:	6 A
Utilization category	C300

Notes:
- Use 60° or 75 °C copper (Cu) conductor, rigid or flexible, wire size AWG 30-12.
- Terminal tightening torque of 5-7 Lb In.
- Only for 24 Vac/dc version, supply from remote class 2 source or limited voltage and limited energy. (Supply from Remote Class 2 Source or limited voltage limited energy).

Safety module CS FS-1

Terminal layout

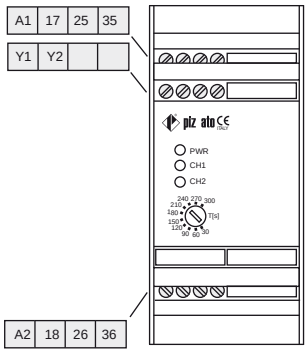

Operation diagram

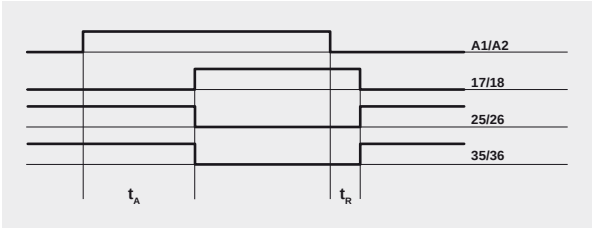

Legend:
t_A: adjustable operating time (see "Code structure")
t_R: releasing time in absence of power supply

Internal diagram

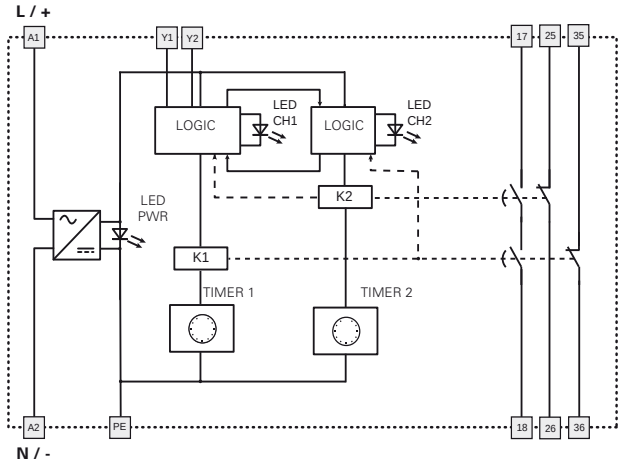

Y1-Y2: optional feedback inputs from any external contactors which are directly controlled by the module.

Circuit structure

Monitoring of a door-lock system with manual release

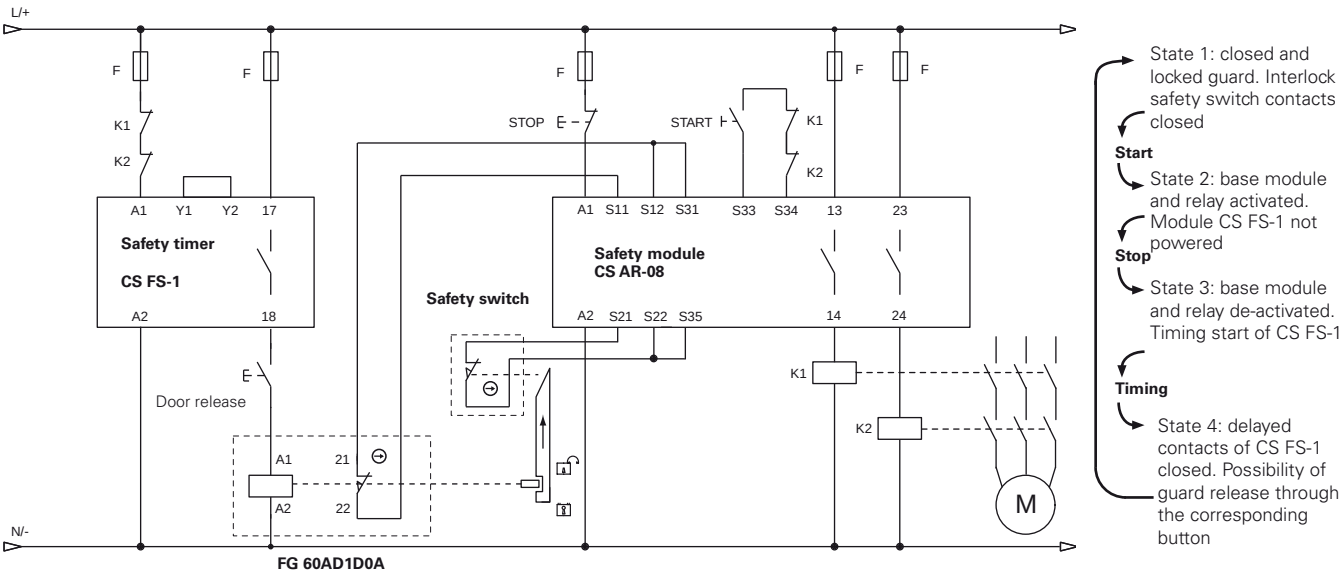

FG 60AD1D0A

The diagram shown displays the operation principle of a typical circuit for the control of a door-lock system with door blocking when interlock safety switch is not energised, and manual release of the single doors.
In order to obtain the complete wiring diagram with different modalities of electrical blocking or with automatic door release, please contact our technical office.

The diagram does not show the exact position of terminals in the product

Safety module **CS FS-2**

Safety timer module with delayed contacts at energizing

Main features
- For safety applications up to SIL CL 2/PL d
- Timed circuits through safety system with self-monitoring and redundancy
- Suitable to control safety interlocked devices
- 45 mm housing
- Output contacts:
  1 NO safety contact,
  1 NC auxiliary contact,
  1 CO auxiliary contact,
- Supply voltage:
  24 Vdc, 120 Vac

Utilization categories
Alternating current: AC15 (50...60 Hz)
Ue (V) 230
Ie (A) 3
Direct current: DC13 (6 op. cycles/minute)
Ue (V) 24
Ie (A) 4

Markings and quality marks:

UL approval: E131787
TÜV SÜD approval: Z10 12 04 75157 003
EAC approval: RU C-IT ДМ94.B.01024
CCC approval: 2013010305640211

In conformity with the requirements of:
Low Voltage Directive 2006/95/EC,
Machinery Directive 2006/42/EC,
EMC Directive 2004/108/EC

Technical data

Housing
PA 6.6 polyamide housing, self-extinguishing, V0 acc. to UL 94

Protection degree:	IP40 (housing), IP20 (terminal strip)
Dimensions:	see page 284, design C

General data

SIL CL:	up to SIL CL 2 acc. to EN 62061
Performance Level (PL):	up to PL d acc. to EN ISO 13849-1
Safety category:	up to cat. 3 acc. to EN ISO 13849-1
Safety parameters:	see page 333
Ambient temperature:	-25°C...+55°C
Mechanical endurance:	>10 million operating cycles
Electrical endurance:	>100,000 operating cycles
Pollution degree:	external 3, internal 2
Impulse voltage (Uimp):	4 kV
Rated insulation voltage (Ui):	250 V
Overvoltage category:	II
Weight:	0.2 kg

Supply

Rated supply voltage (Un):	24 Vdc (A1-A2) 120 Vac; 50...60 Hz (B1-B2)
DC maximum residual ripple:	10%
Supply voltage tolerance:	±15% of Un
AC consumption:	< 5 VA
DC consumption:	< 2 W

Control circuit

Protection against short circuits:	resistance PTC, Ih=0.5 A
PTC timing:	intervention > 100 ms, reset > 3 s
Operating time t_A:	see "Code structure"
Releasing time in absence of power supply t_R:	< 40 ms

In conformity with standards:
EN 60204-1, EN ISO 13855, EN 1037, EN ISO 12100, EN ISO 13850, EN 60529, EN 61000-6-2, EN 61000-6-3, EN 62326-1, EN 60664-1, EN 60947-1, EN ISO 13849-1, EN ISO 13849-2, EN 62061, UL 508, CSA C22.2 n° 14-95

Output circuit

Output contacts:	1 NO safety contact, 1 NC auxiliary contact, 1 CO auxiliary contact,
Contact type:	forcibly guided
Contact material:	silver alloy
Maximum switching voltage:	230/240 Vac; 300 Vdc
Max. current per contact:	6 A
Conventional free air thermal current Ith:	6 A
Max. total current Σ Ith^2:	36 A^2
Minimum current:	10 mA
Contact resistance:	≤ 100 mΩ
External protection fuse:	4 A
Signalling output error (Y14):	Type PNP
Rated operating voltage (Ue):	24 Vdc
Rated operating current (Ie):	10 mA

The number and the load capacity of output contacts can be increased by using expansion modules or contactors. See pages 231-240.

Code structure

CS FS-20VU24-TFxx

Operating time (t_A)	
0	Fixed time (see TFx)
1	from 0.3 to 3 s, step 0.3 s
2	from 1 to 10 s, step 1 s
3	from 3 to 30 s, step 3 s
4	from 30 to 300 s, step 30 s

Connection type	
V	screw terminals
M	connector with screw terminals
X	connector with spring terminals

Supply voltage		
U24	24 Vdc	±15%
120	24 Vdc (A1-A2) 120 Vac (B1-B2)	±15% ±15%

Operating time (t_A)	
TFxx	xx s (fixed time)

Characteristics approved by UL
Rated supply voltage (Un): 24 Vdc; 120 Vac; 50...60 Hz:
AC consumption: < 5 VA
DC consumption: < 2 W
Maximum switching voltage: 230 Vac
Max. current per contact: 6 A
Utilization category: C300
- Use 60° or 75 °C copper (Cu) conductor, rigid or flexible, wire size AWG 30-12.
- Terminal tightening torque of 5-7 Lb In.
- Only for 24 Vac/dc version, supply from remote class 2 source or limited voltage and limited energy. (Supply from Remote Class 2 Source or limited voltage limited energy).

Characteristics approved by TÜV SÜD
Rated supply voltage (Un): 24 Vdc; ± 15%, 120 Vac ± 15%
Consumption: 5 VA max. AC, 2 W max. DC
Rated operating current (max.): 4 A
Max. switching load (max.): 1380 VA
Ambient temperature: -25°C ... +55°C
Storage temperature: -25°C ... +70°C
Protection degree: IP40 (housing), IP20 (terminal strip)
In conformity with standards: 2006/42/EEC Machine Directive, EN ISO 13849-1 (up to Cat. 4 PL e), EN 50178:1997, EN 60947-5-3/A1:2005, EN 61508-1:1998 (SIL CL 1-3), EN 61508-2:2000 (SIL CL 1-3), EN 61508-4:1998 (SIL CL 1-3), IEC 62061:2005 (SIL CL 3)

Safety module CS FS-2

Terminal layout

CS FS-20••••-TFxx

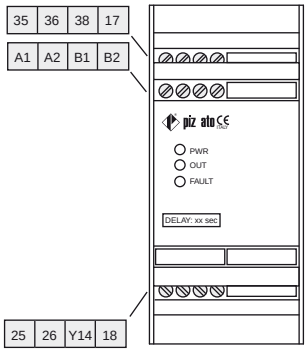

CS FS-2•••••

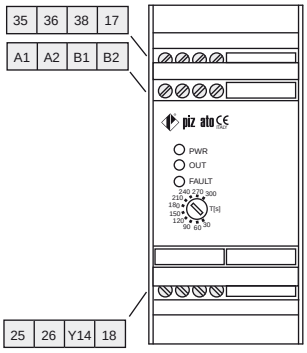

Operation diagram

CS FS-2••••• Delay on
Normal operation without faults

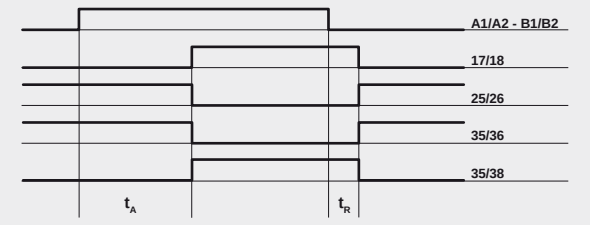

Legend:
t_A: adjustable operating time (see "Code structure")
t_R: releasing time in absence of power supply

Internal diagram

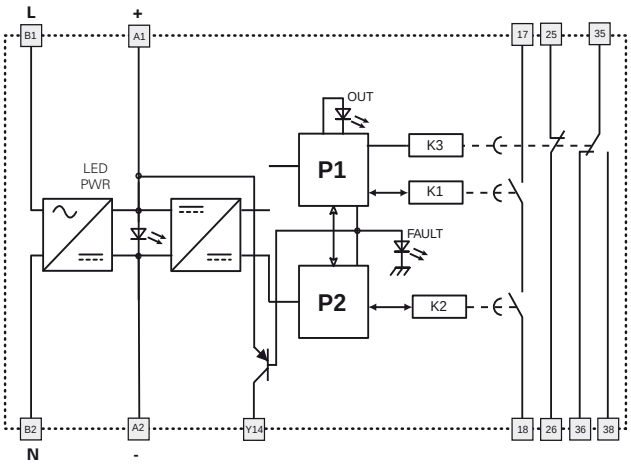

A1-A2: 24 Vdc
B1-B2: 120 Vac

Y14: auxiliary output activated when the module enters fault state.

Safety module **CS FS-3**

Safety timer module with ON pulse function

Main features
- For safety applications up to SIL CL 2/PL d
- Timed circuits through safety system with self-monitoring and redundancy
- Suitable to control safety interlocked devices
- 45 mm housing
- Output contacts:
  1 NO safety contact,
  1 NC auxiliary contact,
  1 CO auxiliary contact,
- Supply voltage:
  24 Vdc, 120 Vac

Utilization categories
Alternating current: AC15 (50...60 Hz)
Ue (V) 230
Ie (A) 3
Direct current: DC13 (6 op. cycles/minute)
Ue (V) 24
Ie (A) 4

Markings and quality marks:

UL approval: E131787
TÜV SÜD approval: Z10 12 04 75157 003
EAC approval: RU C-IT ДМ94.В.01024
CCC approval: 2013010305640211

In conformity with the requirements of:
Low Voltage Directive 2006/95/EC,
Machinery Directive 2006/42/EC,
EMC Directive 2004/108/EC

Technical data

Housing
PA 6.6 polyamide housing, self-extinguishing, V0 acc. to UL 94

Protection degree:	IP40 (housing), IP20 (terminal strip)
Dimensions:	see page 284, design C

General data

SIL CL:	up to SIL CL 2 acc. to EN 62061
Performance Level (PL):	up to PL d acc. to EN ISO 13849-1
Safety category:	up to cat. 3 acc. to EN ISO 13849-1
Safety parameters:	see page 333
Ambient temperature:	-25°C...+55°C
Mechanical endurance:	>10 million operating cycles
Electrical endurance:	>100,000 operating cycles
Pollution degree:	external 3, internal 2
Impulse voltage (Uimp):	4 kV
Rated insulation voltage (Ui):	250 V
Overvoltage category:	II
Weight:	0.2 kg

Supply

Rated supply voltage (Un):	24 Vdc (A1-A2) 120 Vac; 50...60 Hz (B1-B2)
DC maximum residual ripple:	10%
Supply voltage tolerance:	±15% of Un
AC consumption:	< 5 VA
DC consumption:	< 2 W

Control circuit

Protection against short circuits:	resistance PTC, Ih=0.5 A
PTC timing:	intervention > 100 ms, reset > 3 s
Releasing time t_A:	see "Code structure"
Releasing time in absence of power supply t_R:	< 40 ms
Start-up time t_S:	< 200 ms

In conformity with standards:
EN 60204-1, EN ISO 13855, EN 1037, EN ISO 12100, EN ISO 13850, EN 60529, EN 61000-6-2, EN 61000-6-3, EN 62326-1, EN 60664-1, EN 60947-1, EN ISO 13849-1, EN ISO 13849-2, EN 62061, UL 508, CSA C22.2 n° 14-95

Output circuit

Output contacts:	1 NO safety contact, 1 NC auxiliary contact, 1 CO auxiliary contact,
Contact type:	forcibly guided
Contact material:	silver alloy
Maximum switching voltage:	230/240 Vac; 300 Vdc
Max. current per contact:	6 A
Conventional free air thermal current Ith:	6 A
Max. total current Σ Ith^2:	36 A^2
Minimum current:	10 mA
Contact resistance:	≤ 100 mΩ
External protection fuse:	4 A
Signalling output error (Y14):	Type PNP
Rated operating voltage (Ue):	24 Vdc
Rated operating current (Ie):	10 mA

The number and the load capacity of output contacts can be increased by using expansion modules or contactors. See pages 231-240.

Code structure

CS FS-30VU24-TFxx

Releasing time (t_A)	
0	Fixed time (see TFx)
1	from 0.3 to 3 s, step 0.3 s
2	from 1 to 10 s, step 1 s
3	from 3 to 30 s, step 3 s
4	from 30 to 300 s, step 30 s

Connection type	
V	screw terminals
M	connector with screw terminals
X	connector with spring terminals

Supply voltage		
U24	24 Vdc	±15%
120	24 Vdc (A1-A2) 120 Vac (B1-B2)	±15% ±15%

Releasing time (t_A)	
TFxx	xx s (fixed time)

Characteristics approved by UL
Rated supply voltage (Un): 24 Vdc; 120 Vac; 50...60 Hz:
AC consumption: < 5 VA
DC consumption: < 2 W
Maximum switching voltage: 230 Vac
Max. current per contact: 6 A
Utilization category: C300
- Use 60° or 75 °C copper (Cu) conductor, rigid or flexible, wire size AWG 30-12.
- Terminal tightening torque of 5-7 Lb In.
- Only for 24 Vac/dc version, supply from remote class 2 source or limited voltage and limited energy. (Supply from Remote Class 2 Source or limited voltage limited energy).

Characteristics approved by TÜV SÜD
Rated supply voltage (Un): 24 Vdc; ± 15%, 120 Vac ± 15%
Consumption: 5 VA max. AC, 2 W max. DC
Rated operating current (max.): 4 A
Max. switching load (max.): 1380 VA
Ambient temperature: -25°C ... +55°C
Storage temperature: -25°C ... +70°C
Protection degree: IP40 (housing), IP20 (terminal strip)
In conformity with standards: 2006/42/EEC Machine Directive, EN ISO 13849-1 (up to Cat. 4 PL e), EN 50178:1997, EN 60947-5-3/A1:2005, EN 61508-1:1998 (SIL CL 1-3), EN 61508-2:2000 (SIL CL 1-3), EN 61508-4:1998 (SIL CL 1-3), IEC 62061:2005 (SIL CL 3)

Safety module CS FS-3

Terminal layout

CS FS-30••••-TFxx

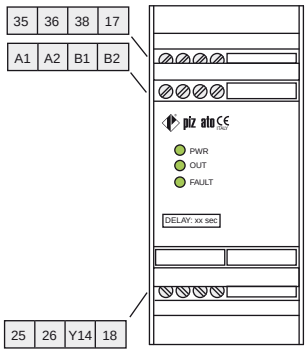

CS FS-3•••••

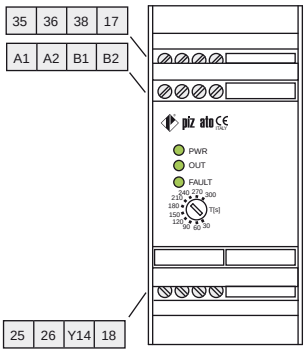

Internal diagram

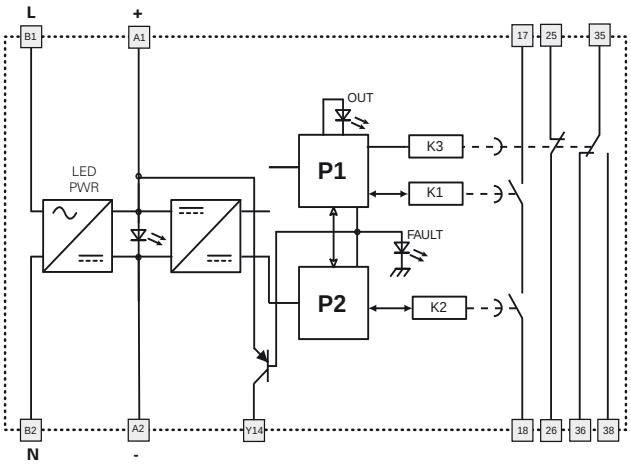

A1-A2: 24 Vdc
B1-B2: 120 Vac

Y14: auxiliary output activated when the module enters fault state.

Operation diagram

CS FS-3••••• Delay off
Normal operation without faults

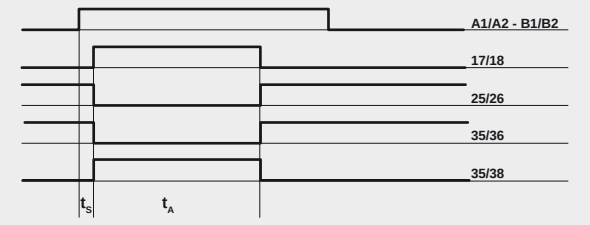

Operation without power supply

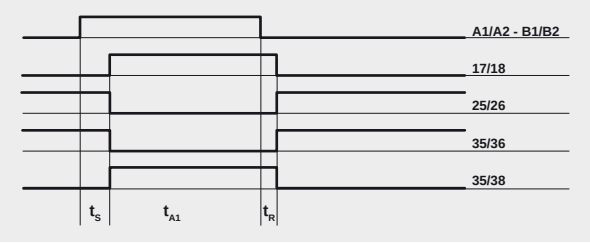

Legend:
t_A: releasing time (see "Code structure")
t_{A1}:: releasing time if duration of power supply is minor to t_A
t_R: releasing time in absence of power supply
t_S: start-up time

Safety module **CS FS-5**

Safety timer module with delayed contacts at opening of the input channels

Main features
- For safety applications up to SIL CL 2/PL d
- Timed circuits through safety system with self-monitoring and redundancy
- Suitable to control safety interlocked devices
- 45 mm housing
- Output contacts:
  1 NO safety contact,
  1 NC auxiliary contact,
  1 CO auxiliary contact,
- Supply voltage:
  24 Vdc, 120 Vac

Utilization categories
Alternating current: AC15 (50...60 Hz)
Ue (V) 230
Ie (A) 3
Direct current: DC13 (6 op. cycles/minute)
Ue (V) 24
Ie (A) 4

Markings and quality marks:

UL approval: E131787
TÜV SÜD approval: Z10 12 04 75157 003
EAC approval: RU C-IT ДМ94.В.01024
CCC approval: 2013010305640211

In conformity with the requirements of:
Low Voltage Directive 2006/95/EC,
Machinery Directive 2006/42/EC,
EMC Directive 2004/108/EC

Technical data

Housing
PA 6.6 polyamide housing, self-extinguishing, V0 acc. to UL 94

Protection degree:	IP40 (housing), IP20 (terminal strip)
Dimensions:	see page 284, design C

General data

SIL CL:	up to SIL CL 2 acc. to EN 62061
Performance Level (PL):	up to PL d acc. to EN ISO 13849-1
Safety category:	up to cat. 3 acc. to EN ISO 13849-1
Safety parameters:	see page 333
Ambient temperature:	-25°C...+55°C
Mechanical endurance:	>10 million operating cycles
Electrical endurance:	>100,000 operating cycles
Pollution degree:	external 3, internal 2
Impulse voltage (Uimp):	4 kV
Rated insulation voltage (Ui):	250 V
Overvoltage category:	II
Weight:	0.2 kg

Supply

Rated supply voltage (Un):	24 Vdc (A1-A2) 120 Vac; 50...60 Hz (B1-B2)
DC maximum residual ripple:	10%
Supply voltage tolerance:	±15% of Un
AC consumption:	< 5 VA
DC consumption:	< 2 W

Control circuit

Protection against short circuits:	resistance PTC, Ih=0.5 A
PTC timing:	intervention > 100 ms, reset > 3 s
Releasing time t_A:	see "Code structure"
Releasing time in absence of power supply t_R:	40 ms

Input circuit

Maximum input resistance:	≤ 50 Ω
Input current:	< 8 mA
Activation time t_S:	< 110 ms
Minimum duration of input signal t_{MIN}:	> 50 ms

In conformity with standards:
EN 60204-1, EN ISO 13855, EN 1037, EN ISO 12100, EN ISO 13850, EN 60529, EN 61000-6-2, EN 61000-6-3, EN 62326-1, EN 60664-1, EN 60947-1, EN ISO 13849-1, EN ISO 13849-2, EN 62061, UL 508, CSA C22.2 n° 14-95

Output circuit

Output contacts:	1 NO safety contact, 1 NC auxiliary contact, 1 CO auxiliary contact,
Contact type:	forcibly guided
Contact material:	silver alloy
Maximum switching voltage:	230/240 Vac; 300 Vdc
Max. current per contact:	6 A
Conventional free air thermal current Ith:	6 A
Max. total current Σ Ith^2:	36 A^2
Minimum current:	10 mA
Contact resistance:	≤ 100 mΩ
External protection fuse:	4 A
Signalling output error (Y14):	Type PNP
Rated operating voltage (Ue):	24 Vdc
Rated operating current (Ie):	10 mA

The number and the load capacity of output contacts can be increased by using expansion modules or contactors. See pages 231-240.

Code structure

Releasing time delayed contacts

CS FS-50VU24-TFxx

Releasing time (t_A)	
0	Fixed time (see TFx)
1	from 0.3 to 3 s, step 0.3 s
2	from 1 to 10 s, step 1 s
3	from 3 to 30 s, step 3 s
4	from 30 to 300 s, step 30 s

Connection type	
V	screw terminals
M	connector with screw terminals
X	connector with spring terminals

Supply voltage		
U24	24 Vdc	±15%
120	24 Vdc (A1-A2) 120 Vac (B1-B2)	±15% ±15%

Releasing time (t_A)	
TFxx	xx s (fixed time)

Characteristics approved by UL
Rated supply voltage (Un): 24 Vdc; 120 Vac; 50...60 Hz:
AC consumption: < 5 VA
DC consumption: < 2 W
Maximum switching voltage: 230 Vac
Max. current per contact: 6 A
Utilization category: C300
- Use 60° or 75 °C copper (Cu) conductor, rigid or flexible, wire size AWG 30-12.
- Terminal tightening torque of 5-7 Lb In.
- Only for 24 Vac/dc version, supply from remote class 2 source or limited voltage and limited energy. (Supply from Remote Class 2 Source or limited voltage limited energy).

Characteristics approved by TÜV SÜD
Rated supply voltage (Un): 24 Vdc; ± 15%, 120 Vac ± 15%
Consumption: 5 VA max. AC, 2 W max. DC
Rated operating current (max.): 4 A
Max. switching load (max.): 1380 VA
Ambient temperature: -25°C ... +55°C
Storage temperature: -25°C ... +70°C
Protection degree: IP40 (housing), IP20 (terminal strip)
In conformity with standards: 2006/42/EEC Machine Directive, EN ISO 13849-1 (up to Cat. 4 PL e), EN 50178:1997, EN 60947-5-3/A1:2005, EN 61508-1:1998 (SIL CL 1-3), EN 61508-2:2000 (SIL CL 1-3), EN 61508-4:1998 (SIL CL 1-3), IEC 62061:2005 (SIL CL 3)

Safety module CS FS-5

Terminal layout

CS FS-50••••-TFxx

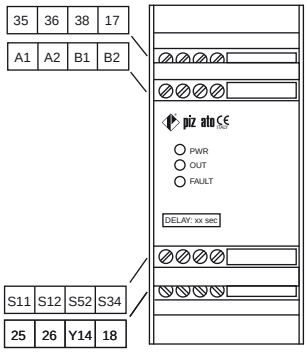

CS FS-5•••••

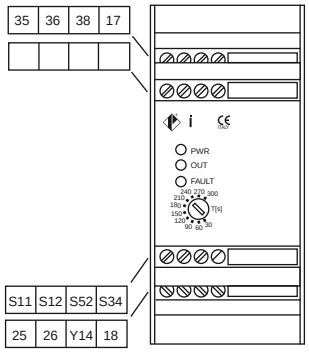

Operation diagram

Configuration with automatic start

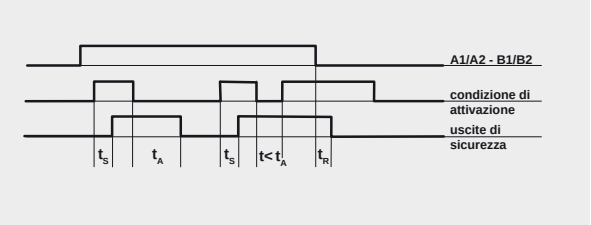

Configuration with manual start

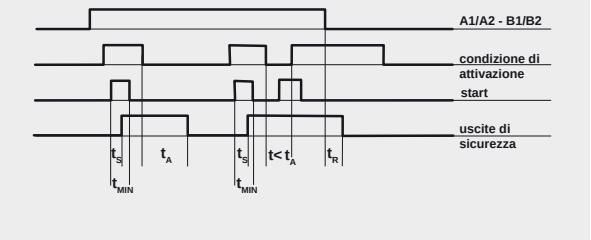

Legend:
t_A: releasing time (see "Code structure")
t_R: releasing time in absence of power supply
t_S: activation time
t_{MIN}: minimum duration of input signal

Internal diagram

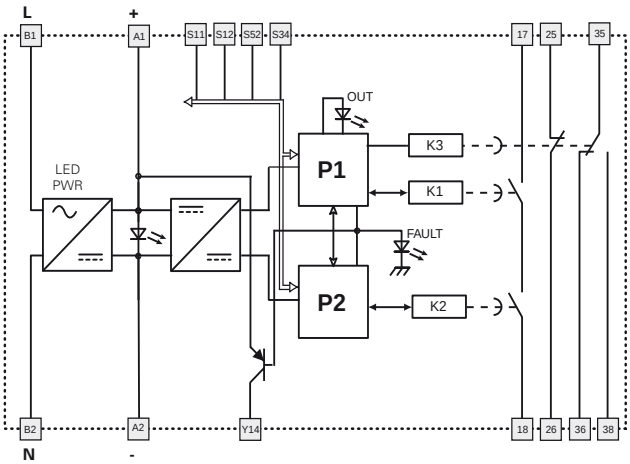

A1-A2: 24 Vdc
B1-B2: 120 Vac

Y14: auxiliary output activated when the module enters fault state.

Input configuration

Movable guard monitoring	
Input configuration with manual start	
1 channel	2 channels

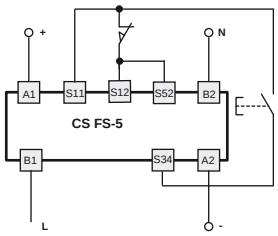

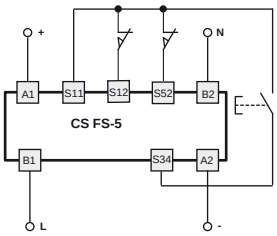

Automatic start

With regard to the indicated diagrams, bridge the start button between S33 and S34 in order to activate the automatic start module.

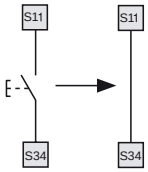

Movable guard monitoring and magnetic safety sensors

The safety module can control movable guard monitoring circuits or magnetic safety sensors. Replace the switch contacts with the sensors contacts.
The sensors can only be used in 2-channel configuration.

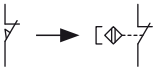

Safety module **CS DM-01**

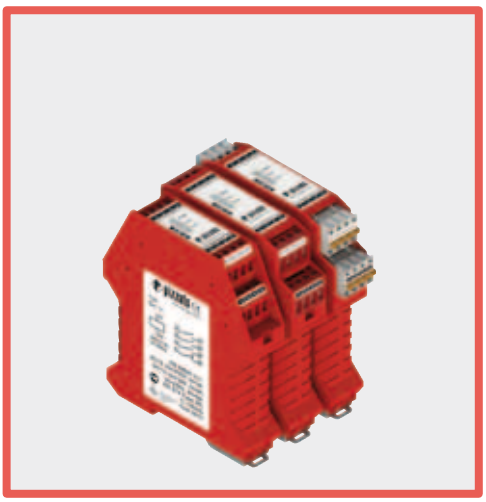

Two-hand control according to EN 574: type III C or safety module with synchronism control

Main features
- For safety applications up to SIL CL 3/PL e
- Two-channel inputs for two-hand control device or movable guards
- Connection of the input channels to opposite potentials
- Small 22.5 mm housing
- 3 NO safety contacts, 1 NC auxiliary contact
- Supply voltage: 24 Vac/dc, 120 Vac, 230 Vac

Utilization categories
Alternating current: AC15 (50...60 Hz)
Ue (V) 230
Ie (A) 3
Direct current: DC13 (6 op. cycles/minute)
Ue (V) 24
Ie (A) 4

Markings, quality marks and certificates:

UL approval:	E131787
EC type examination certificate:	IMQ BP 210 DM
EAC approval:	RU C-IT ДМ94.В.01024
CCC approval:	2013010305640211

In conformity with the requirements of:
Low Voltage Directive 2006/95/EC,
Machinery Directive 2006/42/EC,
EMC Directive 2004/108/EC

Technical data

Housing
PA 6.6 polyamide housing, self-extinguishing, V0 acc. to UL 94

Protection degree:	IP40 (housing), IP20 (terminal strip)
Dimensions:	see page 283, design A

General data

SIL CL:	up to SIL CL 3 acc. to EN 62061
Performance Level (PL):	up to PL e acc. to EN ISO 13849-1
Safety category:	up to cat. 4 acc. to EN ISO 13849-1
Type of two-hand control device:	EN 574: type III C
Safety parameters:	see page 333
Ambient temperature:	-25°C...+55°C
Mechanical endurance:	>10 million operating cycles
Electrical endurance:	>100,000 operating cycles
Pollution degree:	external 3, internal 2
Impulse voltage (Uimp):	4 kV
Rated insulation voltage (Ui):	250 V
Overvoltage category:	II
Weight:	0.3 kg

Supply

Rated supply voltage (Un):	24 Vac/dc; 50...60 Hz 120 Vac; 50…60 Hz 230 Vac; 50…60 Hz
DC maximum residual ripple:	10%
Supply voltage tolerance:	±15% of Un
AC consumption:	< 5 VA
DC consumption:	< 2 W

Control circuit

Protection against short circuits:	resistance PTC, Ih=0.5 A
PTC timing:	intervention > 100 ms, reset > 3 s
Maximum input resistance:	≤ 50 Ω
Input current:	< 30 mA
Operating time t_A:	< 50 ms
Releasing time t_{R1}:	< 20 ms
Releasing time in absence of power supply t_R:	< 70 ms
Time range for synchronized actuation t_{SN}:	< 0.5 s

In conformity with standards:
EN 60204-1, EN ISO 13855, EN 1037, EN ISO 12100, EN ISO 13850, EN 60529, EN 61000-6-2, EN 61000-6-3, EN 62326-1, EN 60664-1, EN 60947-1, EN ISO 13849-1, EN ISO 13849-2, EN 62061, UL 508, CSA C22.2 n° 14-95

Output circuit

Output contacts:	3 NO safety contacts, 1 NC auxiliary contact
Contact type:	forcibly guided
Contact material:	gold-plated silver alloy
Maximum switching voltage:	230/240 Vac; 300 Vdc
Max. current per contact:	6 A
Conventional free air thermal current Ith:	6 A
Max. total current Σ Ith^2:	64 A^2
Minimum current:	10 mA
Contact resistance:	≤ 100 mΩ
External protection fuse:	4 A

The number and the load capacity of output contacts can be increased by using expansion modules or contactors. See pages 231-240.

Code structure

CS DM-01V024

Connection type	
V	screw terminals
M	connector with screw terminals
X	connector with spring terminals

Supply voltage		
024	24 Vac/dc	±15%
120	120 Vac	±15%
230	230 Vac	±15%

Stock items

CS DM-01V024

Characteristics approved by UL

Rated supply voltage (Un):	24 Vac/dc; 50...60 Hz 120 Vac; 50…60 Hz 230 Vac; 50…60 Hz
AC consumption:	< 5 VA
DC consumption:	< 2 W
Maximum switching voltage:	230 Vac
Max. current per contact:	6 A
Utilization category	C300

Notes:
- Use 60° or 75 °C copper (Cu) conductor, rigid or flexible, wire size AWG 30-12.
- Terminal tightening torque of 5-7 Lb In.
- Only for 24 Vac/dc version, supply from remote class 2 source or limited voltage and limited energy. (Supply from Remote Class 2 Source or limited voltage limited energy).

Safety module CS DM-01

Terminal layout

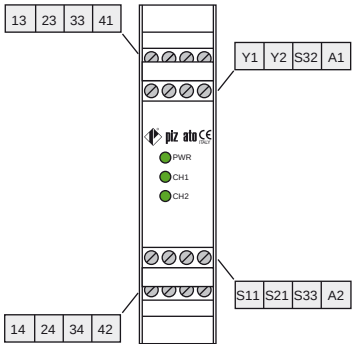

Operation diagram

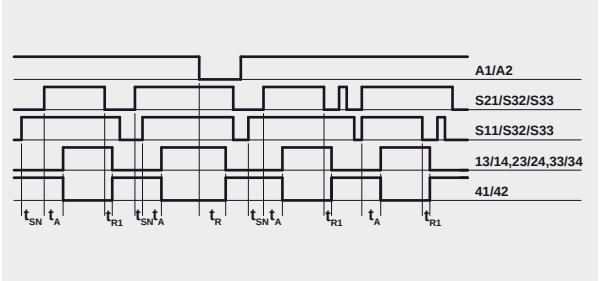

Legend:
t_{SN}: Time range for synchronized actuation
t_A: operating time
t_{R1}: releasing time
t_R: releasing time in absence of power supply

Internal diagram

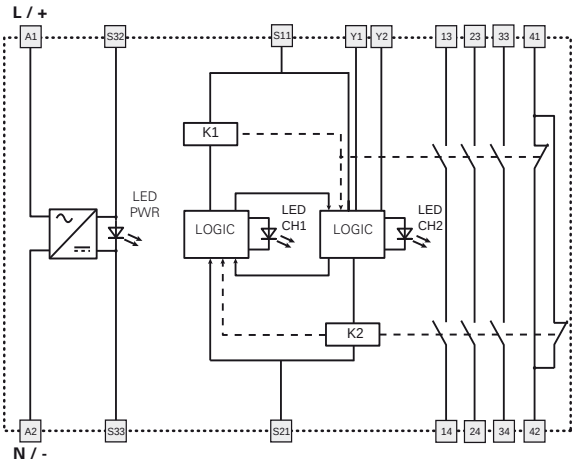

Input configuration

Circuit with two-hand control device type III C according to EN 574

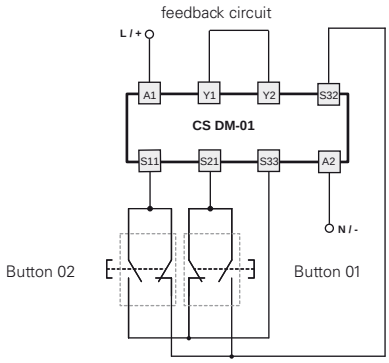

Movable guard monitoring with automatic start and simultaneity between channels < 0.5 s (safety category 4)

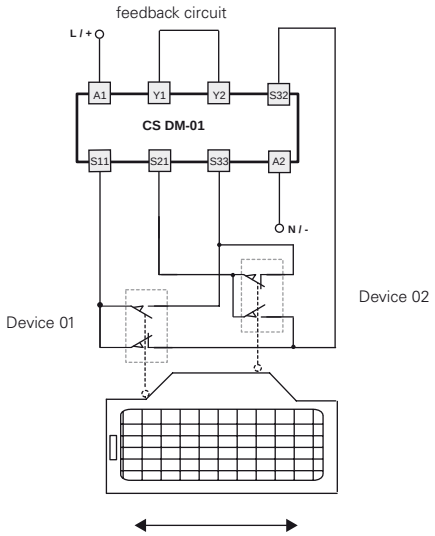

The diagram does not show the exact position of terminals in the product

Safety module **CS DM-02**

Two-hand control according to EN 574: type III C or safety module with synchronism control

Main features
- For safety applications up to SIL CL 3/PL e
- Two-channel inputs for two-hand control device or movable guards
- Connection of the input channels to opposite potentials
- Small 22.5 mm housing
- 2 NO safety contacts,
- Supply voltage: 24 Vac/dc, 120 Vac, 230 Vac

Utilization categories
Alternating current: AC15 (50...60 Hz)
Ue (V) 230
Ie (A) 3
Direct current: DC13 (6 op. cycles/minute)
Ue (V) 24
Ie (A) 4

Markings, quality marks and certificates:

UL approval:	E131787
EC type examination certificate:	IMQ BP 210 DM
EAC approval:	RU C-IT ДМ94.В.01024
CCC approval:	2013010305640211

In conformity with the requirements of:
Low Voltage Directive 2006/95/EC,
Machinery Directive 2006/42/EC,
EMC Directive 2004/108/EC

Technical data

Housing
PA 6.6 polyamide housing, self-extinguishing, V0 acc. to UL 94

Protection degree:	IP40 (housing), IP20 (terminal strip)
Dimensions:	see page 283, design A

General data

SIL CL:	up to SIL CL 3 acc. to EN 62061
Performance Level (PL):	up to PL e acc. to EN ISO 13849-1
Safety category:	up to cat. 4 acc. to EN ISO 13849-1
Type of two-hand control device:	EN 574: type III C
Safety parameters:	see page 333
Ambient temperature:	-25°C...+55°C
Mechanical endurance:	>10 million operating cycles
Electrical endurance:	>100,000 operating cycles
Pollution degree:	external 3, internal 2
Impulse voltage (Uimp):	4 kV
Rated insulation voltage (Ui):	250 V
Overvoltage category:	II
Weight:	0.3 kg

Supply

Rated supply voltage (Un):	24 Vac/dc; 50...60 Hz 120 Vac; 50…60 Hz 230 Vac; 50…60 Hz
DC maximum residual ripple:	10%
Supply voltage tolerance:	±15% of Un
AC consumption:	< 5 VA
DC consumption:	< 2 W

Control circuit

Protection against short circuits:	resistance PTC, Ih=0.5 A
PTC timing:	intervention > 100 ms, reset > 3 s
Maximum input resistance:	≤ 50 Ω
Input current:	< 30 mA
Operating time t_A:	< 30 ms
Releasing time t_{R1}:	< 25 ms
Releasing time in absence of power supply t_R:	< 90 ms
Time range for synchronized actuation t_{SN}:	< 0.5 s

In conformity with standards:
EN 60204-1, EN ISO 13855, EN 1037, EN ISO 12100, EN ISO 13850, EN 60529, EN 61000-6-2, EN 61000-6-3, EN 62326-1, EN 60664-1, EN 60947-1, EN ISO 13849-1, EN ISO 13849-2, EN 62061, UL 508, CSA C22.2 n° 14-95

Output circuit

Output contacts:	2 NO safety contacts,
Contact type:	forcibly guided
Contact material:	gold-plated silver alloy
Maximum switching voltage:	230/240 Vac; 300 Vdc
Max. current per contact:	6 A
Conventional free air thermal current Ith:	6 A
Max. total current Σ Ith^2:	36 A^2
Minimum current:	10 mA
Contact resistance:	≤ 100 mΩ
External protection fuse:	4 A

The number and the load capacity of output contacts can be increased by using expansion modules or contactors. See pages 231-240.

Code structure

CS DM-02V024

Connection type	
V	screw terminals
M	connector with screw terminals
X	connector with spring terminals

Supply voltage		
024	24 Vac/dc	±15%
120	120 Vac	±15%
230	230 Vac	±15%

Characteristics approved by UL

Rated supply voltage (Un):	24 Vac/dc; 50...60 Hz 120 Vac; 50…60 Hz 230 Vac; 50…60 Hz
AC consumption:	< 5 VA
DC consumption:	< 2 W
Maximum switching voltage:	230 Vac
Max. current per contact:	6 A
Utilization category	C300

Notes:
- Use 60° or 75 °C copper (Cu) conductor, rigid or flexible, wire size AWG 30-12.
- Terminal tightening torque of 5-7 Lb In.
- Only for 24 Vac/dc version, supply from remote class 2 source or limited voltage and limited energy. (Supply from Remote Class 2 Source or limited voltage limited energy).

Safety module CS DM-02

Terminal layout

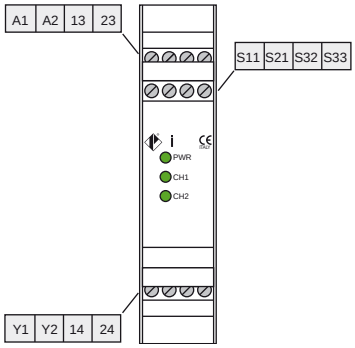

Operation diagram

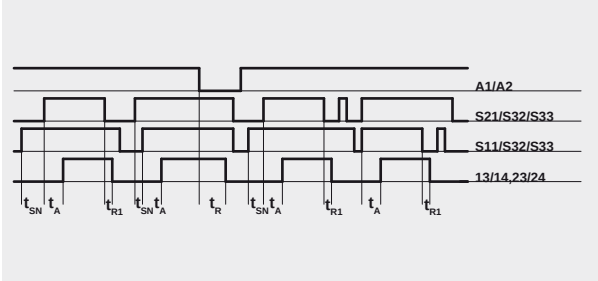

Legend:
t_{SN}: Time range for synchronized actuation
t_A: operating time
t_{R1}: releasing time
t_R: releasing time in absence of power supply

Internal diagram

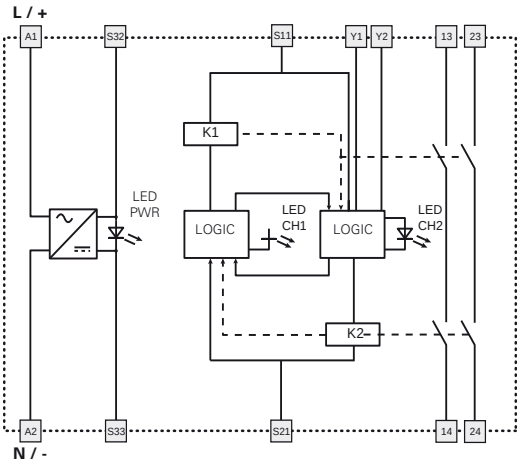

Input configuration

Circuit with two-hand control device type III C according to EN 574

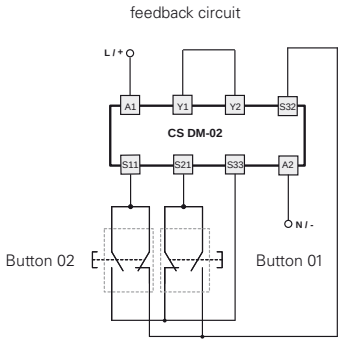

Movable guard monitoring with automatic start and simultaneity between channels < 0.5 s (safety category 4)

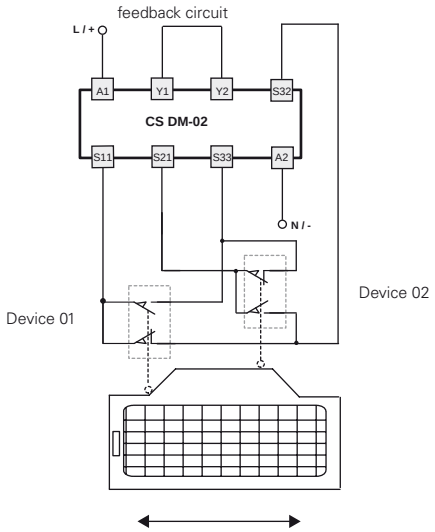

The diagram does not show the exact position of terminals in the product

Safety module **CS DM-20**

Two-hand control according to EN 574: type III A or safety module with synchronism control

Main features
- For safety applications up to SIL CL 1/PL c
- Two-channel inputs for two-hand control device or movable guards
- Connection of the input channels to opposite potentials
- Small 22.5 mm housing
- 2 NO safety contacts,
- Supply voltage: 24 Vac/dc, 120 Vac, 230 Vac

Utilization categories
Alternating current: AC15 (50...60 Hz)
Ue (V) 230
Ie (A) 3
Direct current: DC13 (6 op. cycles/minute)
Ue (V) 24
Ie (A) 4

Markings, quality marks and certificates:

UL approval: E131787
EC type examination certificate: IMQ BP 210 DM
EAC approval: RU C-IT ДМ94.В.01024
CCC approval: 2013010305640211

In conformity with the requirements of:
Low Voltage Directive 2006/95/EC,
Machinery Directive 2006/42/EC,
EMC Directive 2004/108/EC

Technical data

Housing
PA 6.6 polyamide housing, self-extinguishing, V0 acc. to UL 94

Protection degree:	IP40 (housing), IP20 (terminal strip)
Dimensions:	see page 283, design A

General data

SIL CL:	up to SIL CL 1 acc. to EN 62061
Performance Level (PL):	up to PL c acc. to EN ISO 13849-1
Safety category:	up to cat. 1 acc. to EN ISO 13849-1
Type of two-hand control device:	EN 574: type III A
Safety parameters:	see page 333
Ambient temperature:	-25°C...+55°C
Mechanical endurance:	>10 million operating cycles
Electrical endurance:	>100,000 operating cycles
Pollution degree:	external 3, internal 2
Impulse voltage (Uimp):	4 kV
Rated insulation voltage (Ui):	250 V
Overvoltage category:	II
Weight:	0.2 kg

Supply

Rated supply voltage (Un):	24 Vac/dc; 50...60 Hz 120 Vac; 50…60 Hz 230 Vac; 50…60 Hz
DC maximum residual ripple:	10%
Supply voltage tolerance:	±15% of Un
AC consumption:	< 5 VA
DC consumption:	< 2 W

Control circuit

Protection against short circuits:	resistance PTC, Ih=0.5 A
PTC timing:	intervention > 100 ms, reset > 3 s
Maximum input resistance:	≤ 100 Ω
Input current:	< 32 mA
Operating time t_A:	< 12 ms
Releasing time t_{R1}:	< 10 ms
Releasing time in absence of power supply t_R:	< 200 ms
Time range for synchronized actuation t_{SN}:	< 0.5 s

In conformity with standards:
EN 60204-1, EN ISO 13855, EN 1037, EN ISO 12100, EN ISO 13850, EN 60529, EN 61000-6-2, EN 61000-6-3, EN 62326-1, EN 60664-1, EN 60947-1, EN ISO 13849-1, EN ISO 13849-2, EN 62061, UL 508, CSA C22.2 n° 14-95

Output circuit

Output contacts:	2 NO safety contacts,
Contact type:	forcibly guided
Contact material:	gold-plated silver alloy
Maximum switching voltage:	230/240 Vac; 300 Vdc
Max. current per contact:	6 A
Conventional free air thermal current Ith:	6 A
Max. total current Σ Ith^2:	36 A^2
Minimum current:	10 mA
Contact resistance:	≤ 100 mΩ
External protection fuse:	4 A

The number and the load capacity of output contacts can be increased by using expansion modules or contactors. See pages 231-240.

Code structure

CS DM-20V024

Connection type	
V	screw terminals
M	connector with screw terminals
X	connector with spring terminals

Supply voltage		
024	24 Vac/dc	±15%
120	120 Vac	±15%
230	230 Vac	±15%

Characteristics approved by UL

Rated supply voltage (Un):	24 Vac/dc; 50...60 Hz 120 Vac; 50…60 Hz 230 Vac; 50…60 Hz
AC consumption:	< 5 VA
DC consumption:	< 2 W
Maximum switching voltage:	230 Vac
Max. current per contact:	6 A
Utilization category	C300

Notes:
- Use 60° or 75 °C copper (Cu) conductor, rigid or flexible, wire size AWG 30-12.
- Terminal tightening torque of 5-7 Lb In.
- Only for 24 Vac/dc version, supply from remote class 2 source or limited voltage and limited energy. (Supply from Remote Class 2 Source or limited voltage limited energy).

Safety module CS DM-20

Terminal layout

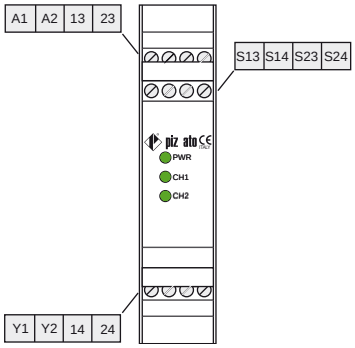

Operation diagram

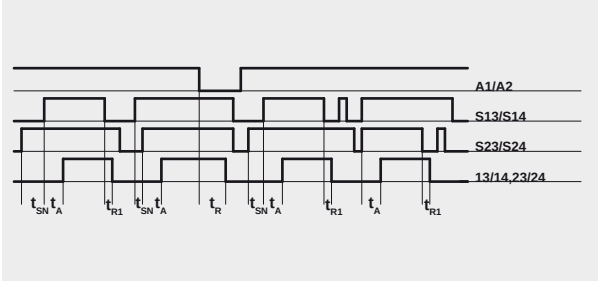

Legend:
t_{SN}: Time range for synchronized actuation
t_A: operating time
t_{R1}: releasing time
t_R: releasing time in absence of power supply

Internal diagram

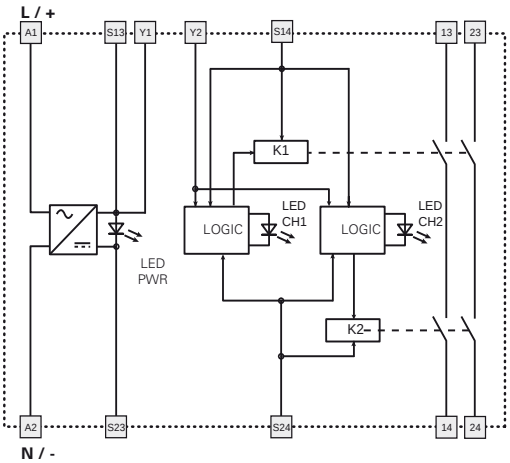

Input configuration

Circuit with two-hand control device type III A according to EN 574

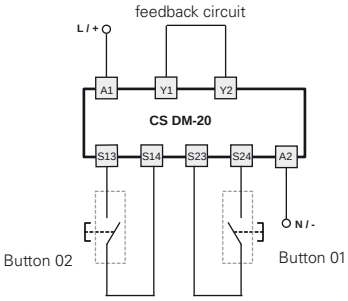

Safety gate monitoring with automatic start wiring and simultaneity between channels < 0,5 s

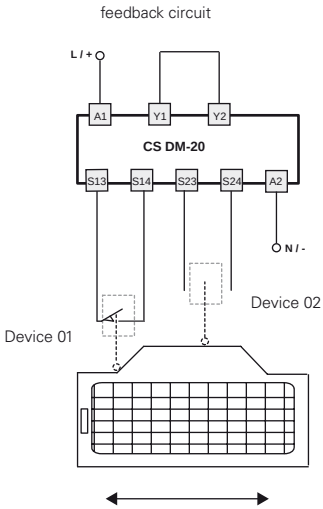

The diagram does not show the exact position of terminals in the product

Safety module **CS AM-0**

Standstill monitor safety module

Main features
- For safety applications up to SIL CL 2/PL d
- Residual voltage at motor-stop selectable on 10 position.
- Galvanic separation between control circuit and measure circuit
- 45 mm housing
- 2 NO safety contacts
  1 NC auxiliary contact
- 2 Semiconductor outputs:
  - 1 output for failure state signalling
  - 1 signalling output for commutation state of safety relays
- Possibility to connect single-phase or three-phase motors to measuring circuits.
- Supply voltages: 24 … 230 Vac/dc

Utilization categories
Alternating current: AC15 (50...60 Hz)
Ue (V) 230
Ie (A) 3
Direct current: DC13 (6 op. cycles/minute)
Ue (V) 24
Ie (A) 4

Markings, quality marks and certificates:

UL approval:	E131787
EAC approval:	RU C-IT ДМ94.В.01024
CCC approval:	2013010305640211

In conformity with the requirements of:
Low Voltage Directive 2006/95/EC,
Machinery Directive 2006/42/EC,
EMC Directive 2004/108/EC

Technical data

Housing
PA 6.6 polyamide housing, self-extinguishing, V0 acc. to UL 94

Protection degree:	IP40 (housing), IP20 (terminal strip)
Dimensions:	see page 284, design C

General data

SIL CL:	up to SIL CL 2 acc. to EN 62061
Performance Level (PL):	up to PL d acc. to EN ISO 13849-1
Safety category:	up to cat. 3 acc. to EN ISO 13849-1
Safety parameters:	see page 333
Ambient temperature:	-25°C...+55°C
Mechanical endurance:	>10 million operating cycles
Electrical endurance:	>100,000 operating cycles
Pollution degree:	external 3, internal 2
Impulse voltage (Uimp):	4 kV
Rated insulation voltage (Ui):	250 V
Overvoltage category:	II
Weight:	< 0.3 kg

Supply

Rated supply voltage (Un):	24 ... 230 Vac/dc; 50...60 Hz
DC maximum residual ripple:	10%
Supply voltage tolerance:	±15% of Un
AC consumption:	< 6 VA
DC consumption:	< 2 W

Input circuit

Voltage between terminals L1-L2-L3:	0 … 690 Vac
Frequency:	0 … 3 kHz
Input impedance:	>1 MΩ
Stopped motor threshold voltage:	from 20 mV to 500 mV adjustable over 10 positions
Started motor threshold voltage:	double stopped motor threshold voltage
Maximum input impedance Y1-Y2:	< 20 Ω
START Y1-Y2 circuit current:	< 70 mA
RESET input voltage:	24 Vdc ± 20%
RESET input current:	10 mA

Control circuit

Operating time t_A:	< 2 s
Releasing time t_{R1}:	< 20 ms
Releasing time in absence of power supply t_R:	< 3 s
Simultaneity time t_C:	3 s
Test:	Autotest on supply voltage activation and after activation of RESET input.
Test duration:	2.5 s (During the test in the measuring circuits the voltage must be lower than the stopped motor threshold voltage)

In conformity with standards:
EN 60204-1, EN ISO 13855, EN 1037, EN ISO 12100, EN ISO 13850, EN 60529, EN 61000-6-2, EN 61000-6-3, EN 62326-1, EN 60664-1, EN 60947-1, EN ISO 13849-1, EN ISO 13849-2, EN 62061, UL 508, CSA C22.2 n° 14-95

Output circuit

Output contacts:	2 NO safety contacts, 1 NC auxiliary contact
Contact type:	forcibly guided
Contact material:	gold-plated silver alloy
Maximum switching voltage:	230/240 Vac; 300 Vdc
Max. current per contact:	6 A
Conventional free air thermal current Ith:	6 A
Max. total current Σ Ith^2:	36 A^2
Minimum current:	10 mA
Contact resistance:	≤ 100 mΩ
External protection fuse:	4 A
Semiconductor outputs:	PNP outputs galvanically separated, overvoltage and short-circuit protected
Switching voltage:	24 Vdc
Switching current:	50 mA
External supply voltage	24 Vdc ±20%

The number and the load capacity of output contacts can be increased by using expansion modules or contactors. See pages 231-240.

Code structure

CS AM-01VE01-TC00

Stopped motor voltage threshold adjustment range

01	from 20 to 500 mV, 53 mV step

Connection type

V	screw terminals
M	connector with screw terminals
X	connector with spring terminals

Simultaneity time (t_C)

TC00	infinite

Characteristics approved by UL

Rated supply voltage (Un): 24 ... 230 Vac/dc; 50...60 Hz

AC consumption:	< 9 VA
DC consumption:	< 2 W
Motor input:	up to 600 V
Output relay:	C300 pilot duty

Notes:
- Suitable for use in environment with pollution degree 2
- Use 60° or 75 °C copper (Cu) conductor, rigid or flexible, wire size AWG 30-12.
- Terminal tightening torque of 5-7 Lb In.

Safety module CS AM-0

Terminal layout

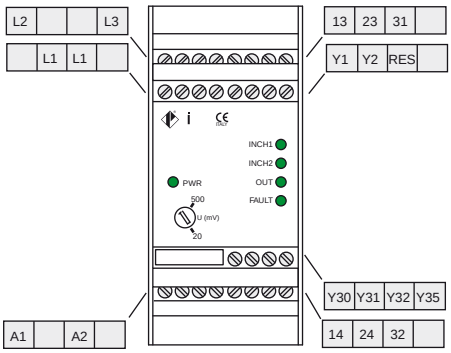

Operation diagrams

Normal operation

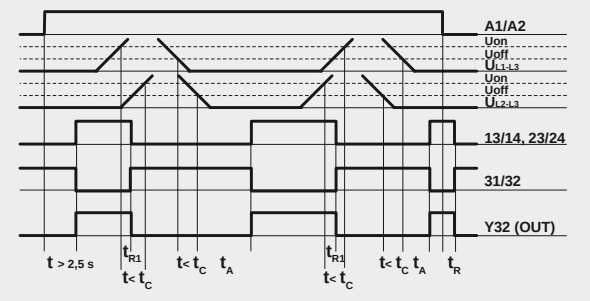

Reset (RES) operation

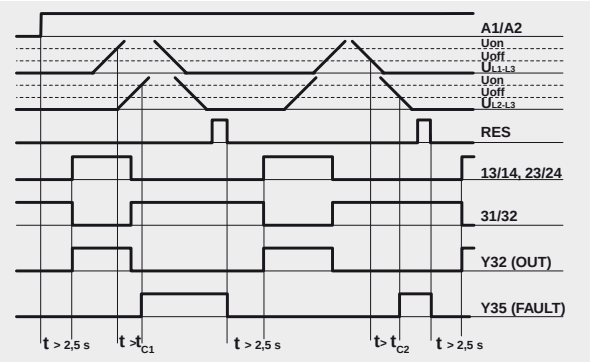

Internal diagram

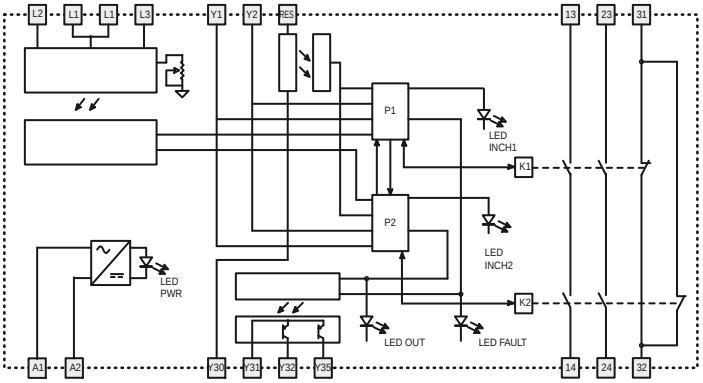

Legend:

t_C: simultaneity time
t_A: operating time
t_{R1}: releasing time
t_R: releasing time in absence of power supply

Input configuration

Single-phase motor

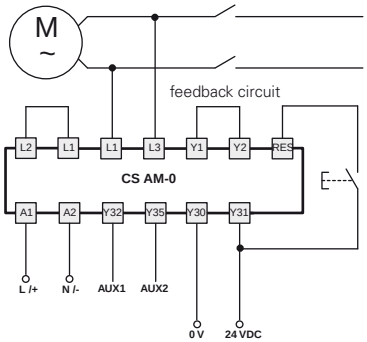

Three-phase motor

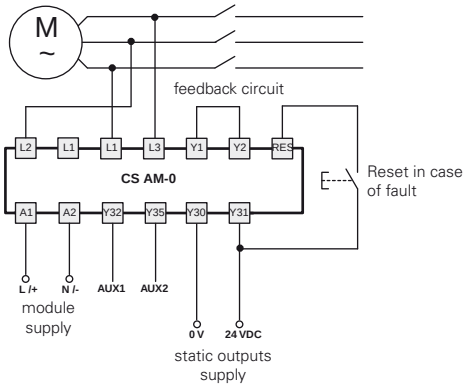

⅄ | △ In case of star/delta starting, connect the module to the ends of a single winding.

For dc motors connect + with L1 and - with L3.

The diagram does not show the exact position of terminals in the product

Expansion module **CS ME-01**

Expansion modules with output contacts

Main features
- For safety applications up to SIL CL 3/PL e
- Possibility of control with one or two channels
- Connection of the input channels to opposite potentials
- Small 22.5 mm housing
- Output contacts:
  5 NO safety contacts,
  1 NC auxiliary contact,
  1 NC feedback contact
- Supply voltage: 24 Vac/dc

Utilization categories
Alternating current: AC15 (50...60 Hz)
Ue (V) 230
Ie (A) 3
Direct current: DC13 (6 op. cycles/minute)
Ue (V) 24
Ie (A) 4

Markings, quality marks and certificates:

UL approval:	E131787
EAC approval:	RU C-IT ДМ94.В.01024
CCC approval:	2013010305640211

In conformity with the requirements of:
Low Voltage Directive 2006/95/EC,
Machinery Directive 2006/42/EC,
EMC Directive 2004/108/EC

Technical data

Housing
PA 6.6 polyamide housing, self-extinguishing, V0 acc. to UL 94

Protection degree:	IP40 (housing), IP20 (terminal strip)
Dimensions:	see page 283, design A

General data

SIL CL:	up to SIL CL 3 acc. to EN 62061
Performance Level (PL):	up to PL e acc. to EN ISO 13849-1
Safety category:	up to cat. 4 acc. to EN ISO 13849-1 (see base module category)
Safety parameters:	see page 333
Ambient temperature:	-25°C...+55°C
Mechanical endurance:	>10 million operating cycles
Electrical endurance:	>100,000 operating cycles
Pollution degree:	external 3, internal 2
Impulse voltage (Uimp):	4 kV
Rated insulation voltage (Ui):	250 V
Overvoltage category:	II
Weight:	0.3 kg

Supply

Rated supply voltage (Un):	24 Vac/dc; 50...60 Hz
DC maximum residual ripple:	10%
Supply voltage tolerance:	±15% of Un
AC consumption:	< 5 VA
DC consumption:	< 2 W

Control circuit

Protection against short circuits:	resistance PTC, Ih=0.5 A
PTC timing:	intervention > 100 ms, reset > 3 s
Maximum input resistance:	≤ 50 Ω
Operating time t_A:	< 40 ms
Releasing time in absence of power supply t_R:	< 40 ms

In conformity with standards:
EN 60204-1, EN ISO 13855, EN 1037, EN ISO 12100, EN ISO 13850, EN 60529, EN 61000-6-2, EN 61000-6-3, EN 62326-1, EN 60664-1, EN 60947-1, EN ISO 13849-1, EN ISO 13849-2, EN 62061, UL 508, CSA C22.2 n° 14-95

Output circuit

Output contacts:	5 NO safety contacts, 1 NC auxiliary contact, 1 NC feedback contact
Contact type:	forcibly guided
Contact material:	gold-plated silver alloy
Maximum switching voltage:	230/240 Vac; 300 Vdc
Max. current per contact:	6 A
Conventional free air thermal current Ith:	6 A
Max. total current Σ Ith^2:	72 A^2
Minimum current:	10 mA
Contact resistance:	≤ 100 mΩ
External protection fuse:	4 A

Code structure

CS ME-01V024

Connection type	
V	screw terminals
M	connector with screw terminals
X	connector with spring terminals

Supply voltage		
024	24 Vac/dc	±15%

Characteristics approved by UL

Rated supply voltage (Un):	24 Vac/dc; 50...60 Hz
AC consumption:	< 5 VA
DC consumption:	< 2 W
Maximum switching voltage:	230 Vac
Max. current per contact:	6 A
Utilization category	C300

Notes:
- Use 60° or 75 °C copper (Cu) conductor, rigid or flexible, wire size AWG 30-12.
- Terminal tightening torque of 5-7 Lb In.
- Only for 24 Vac/dc version, supply from remote class 2 source or limited voltage and limited energy. (Supply from Remote Class 2 Source or limited voltage limited energy).

Expansion module CS ME-01

Terminal layout

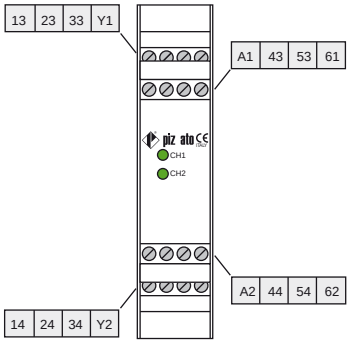

Operation diagram

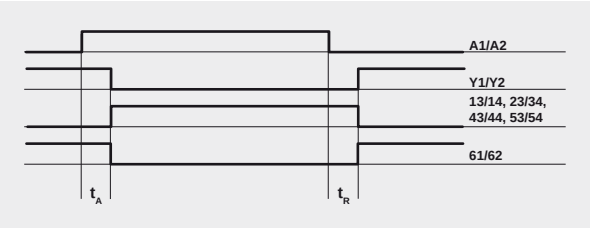

Legend:
t_A: operating time
t_R: releasing time in absence of power supply

Internal diagram

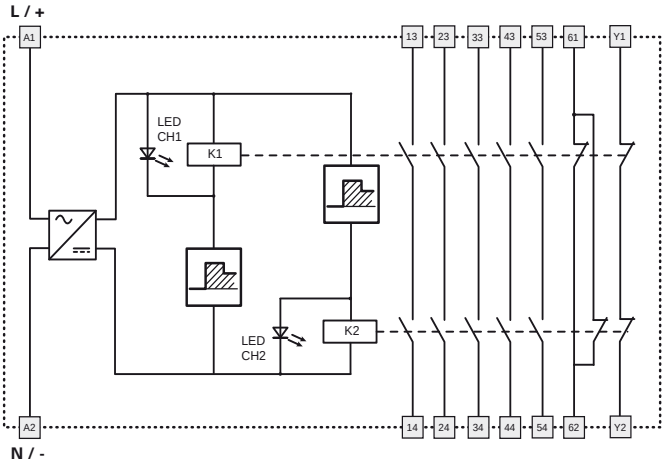

Input configuration

Single channel control	Double channel control

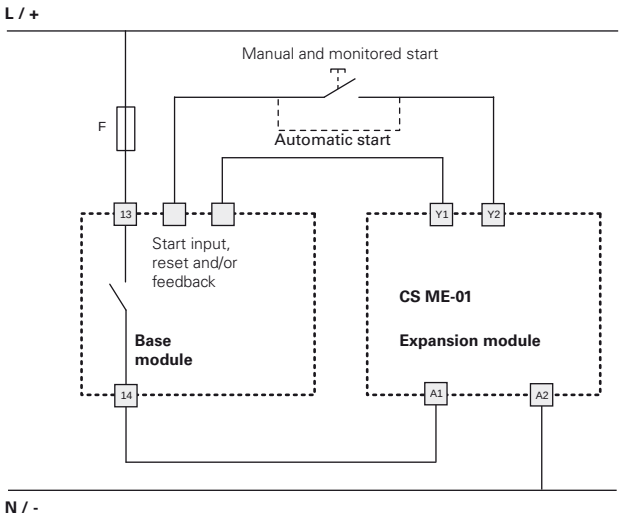

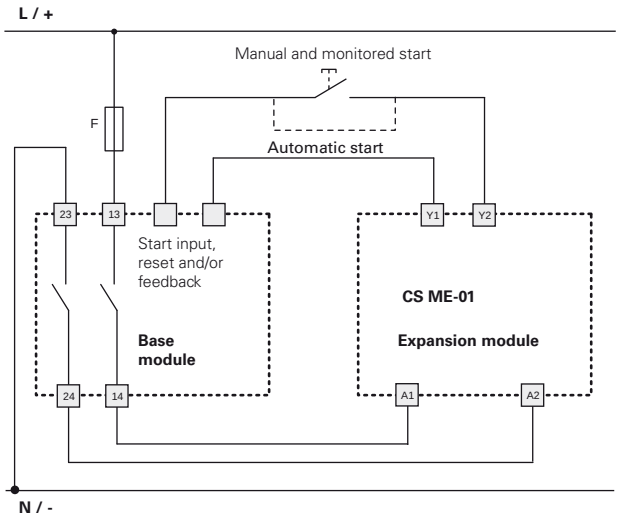

The diagram does not show the exact position of terminals in the product

Expansion module **CS ME-02**

Expansion modules with output contacts

Main features
- For safety applications up to SIL CL 3/PL e
- Possibility of control with one or two channels
- Connection of the input channels to opposite potentials
- Small 22.5 mm housing
- Output contacts:
  4 NO safety contacts,
  2 NC auxiliary contacts,
  1 NC feedback contact
- Supply voltage: 24 Vdc

Utilization categories
Alternating current: AC15 (50...60 Hz)
Ue (V) 230
Ie (A) 3
Direct current: DC13 (6 op. cycles/minute)
Ue (V) 24
Ie (A) 4

Markings, quality marks and certificates:

UL approval:	E131787
EAC approval:	RU C-IT ДМ94.В.01024
CCC approval:	2013010305640211

In conformity with the requirements of:
Low Voltage Directive 2006/95/EC,
Machinery Directive 2006/42/EC,
EMC Directive 2004/108/EC

Technical data

Housing
PA 6.6 polyamide housing, self-extinguishing, V0 acc. to UL 94

Protection degree:	IP40 (housing), IP20 (terminal strip)
Dimensions:	see page 283, design A

General data

SIL CL:	up to SIL CL 3 acc. to EN 62061
Performance Level (PL):	up to PL e acc. to EN ISO 13849-1
Safety category:	up to cat. 4 acc. to EN ISO 13849-1 (see base module category)
Safety parameters:	see page 333
Ambient temperature:	-25°C...+55°C
Mechanical endurance:	>10 million operating cycles
Electrical endurance:	>100,000 operating cycles
Pollution degree:	external 3, internal 2
Impulse voltage (Uimp):	4 kV
Rated insulation voltage (Ui):	250 V
Overvoltage category:	II
Weight:	0.3 kg

Supply

Rated supply voltage (Un):	24 Vdc
DC maximum residual ripple:	10%
Supply voltage tolerance:	±15% of Un
DC consumption:	< 2 W

Control circuit

Protection against short circuits:	resistance PTC, Ih=0.5 A
PTC timing:	intervention > 100 ms, reset > 3 s
Maximum input resistance:	≤ 50 Ω
Operating time t_A:	< 100 ms
Releasing time in absence of power supply t_R:	< 60 ms

In conformity with standards:
EN 60204-1, EN ISO 13855, EN 1037, EN ISO 12100, EN ISO 13850, EN 60529, EN 61000-6-2, EN 61000-6-3, EN 62326-1, EN 60664-1, EN 60947-1, EN ISO 13849-1, EN ISO 13849-2, EN 62061, UL 508, CSA C22.2 n° 14-95

Output circuit

Output contacts:	4 NO safety contacts, 2 NC auxiliary contacts, 1 NC feedback contact
Contact type:	forcibly guided
Contact material:	gold-plated silver alloy
Maximum switching voltage:	230/240 Vac; 300 Vdc
Max. current per contact:	6 A
Conventional free air thermal current Ith:	6 A
Max. total current Σ Ith^2:	64 A^2
Minimum current:	10 mA
Contact resistance:	≤ 100 mΩ
External protection fuse:	4 A

Code structure

CS ME-02VU24

Connection type	
V	screw terminals
M	connector with screw terminals
X	connector with spring terminals

Supply voltage		
U24	24 Vdc	±15%

Characteristics approved by UL

Rated supply voltage (Un):	24 Vdc
DC consumption:	< 2 W
Maximum switching voltage:	230 Vac
Max. current per contact:	6 A
Utilization category	C300

Notes:
- Use 60° or 75 °C copper (Cu) conductor, rigid or flexible, wire size AWG 30-12.
- Terminal tightening torque of 5-7 Lb In.
- Only for 24 Vac/dc version, supply from remote class 2 source or limited voltage and limited energy. (Supply from Remote Class 2 Source or limited voltage limited energy).

Expansion module CS ME-02

Terminal layout

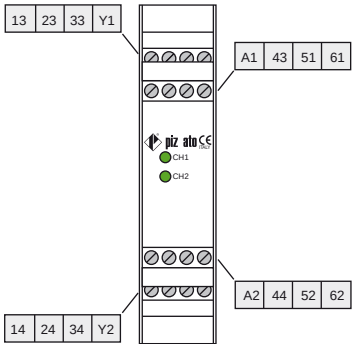

Operation diagram

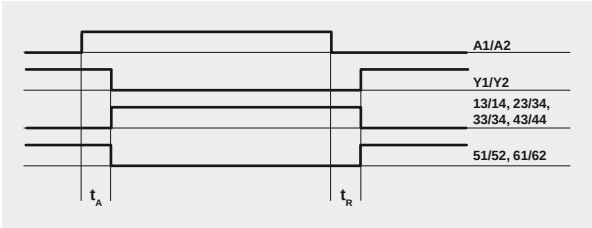

Legend:
t_A: operating time
t_R: releasing time in absence of power supply

Internal diagram

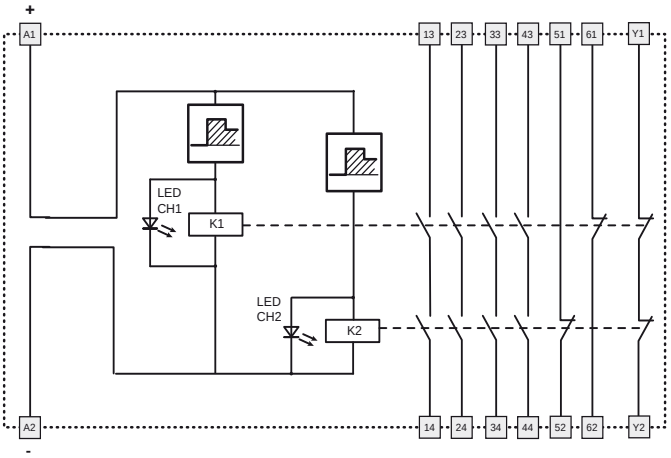

Input configuration

Single channel control	Double channel control

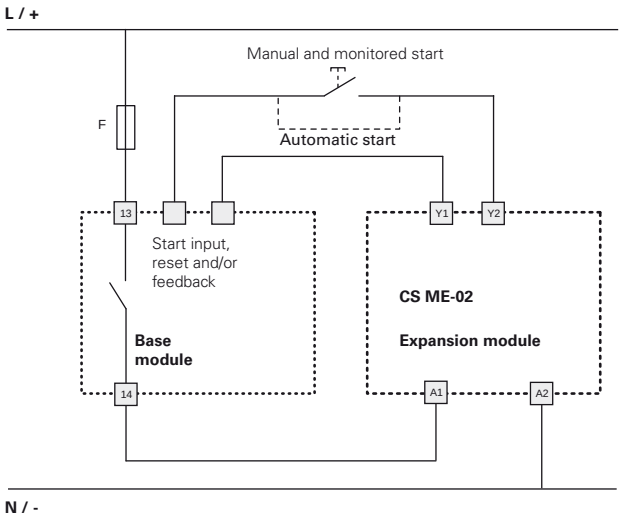

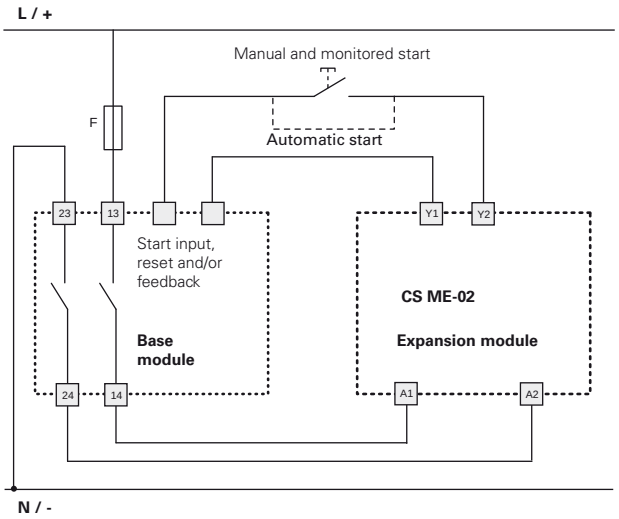

The diagram does not show the exact position of terminals in the product

Expansion module **CS ME-03**

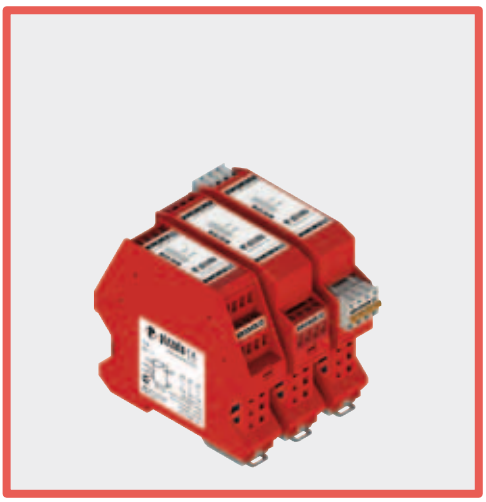

Expansion modules with output contacts

Main features
- For safety applications up to SIL CL 3/PL e
- Module for solid-state output circuits (optical barriers type 2 and 4)
- 2 OSSD inputs
- Small 22.5 mm housing
- Output contacts:
  3 NO safety contacts,
  1 NC feedback contact/EDM
- Supply voltage: 24 Vdc

Technical data

Housing
PA 6.6 polyamide housing, self-extinguishing, V0 acc. to UL 94

Protection degree:	IP40 (housing), IP20 (terminal strip)
Dimensions:	see page 284, design D

General data

SIL CL:	up to SIL CL 3 acc. to EN 62061
Performance Level (PL):	up to PL e acc. to EN ISO 13849-1
Safety category:	up to cat. 4 acc. to EN ISO 13849-1 (dependent on solid state output circuits)
Safety parameters:	see page 333
Ambient temperature:	-25°C...+55°C
Mechanical endurance:	>10 million operating cycles
Electrical endurance:	>100,000 operating cycles
Pollution degree:	external 3, internal 2
Impulse voltage (Uimp):	4 kV
Rated insulation voltage (Ui):	250 V
Overvoltage category:	II
Weight:	0.2 kg

Supply

Rated supply voltage (Un):	24 Vdc
DC maximum residual ripple:	10%
Supply voltage tolerance:	±20% of Un
DC consumption:	< 2 W
Consumption at start:	< 3 W

Control circuit

Operating time t_A:	< 40 ms
Releasing time t_{R1}:	< 15 ms

Utilization categories
Alternating current: AC15 (50...60 Hz)
Ue (V) 230
Ie (A) 3
Direct current: DC13 (6 op. cycles/minute)
Ue (V) 24
Ie (A) 4

Markings, quality marks and certificates:

UL approval:	E131787
EAC approval:	RU C-IT ДМ94.В.01024
CCC approval:	2013010305640211

In conformity with the requirements of:
Low Voltage Directive 2006/95/EC,
Machinery Directive 2006/42/EC,
EMC Directive 2004/108/EC

In conformity with standards:
EN 60204-1, EN ISO 13855, EN 1037, EN ISO 12100, EN ISO 13850, EN 60529, EN 61000-6-2, EN 61000-6-3, EN 62326-1, EN 60664-1, EN 60947-1, EN ISO 13849-1, EN ISO 13849-2, EN 62061, UL 508, CSA C22.2 n° 14-95

Output circuit

Output contacts:	3 NO safety contacts, 1 NC feedback contact
Contact type:	forcibly guided
Contact material:	gold-plated silver alloy
Maximum switching voltage:	230/240 Vac; 300 Vdc
Max. current per contact:	6 A
Conventional free air thermal current Ith:	6 A
Max. total current Σ Ith^2:	36 A^2
Minimum current:	10 mA
Contact resistance:	≤ 100 mΩ
External protection fuse:	4 A

Code structure

CS ME-03VU24

Connection type	
V	screw terminals
M	connector with screw terminals
X	connector with spring terminals

Supply voltage		
U24	24 Vdc	±15%

Characteristics approved by UL

Rated supply voltage (Un):	24 Vac/dc; 50...60 Hz
DC consumption:	< 2 W
Maximum switching voltage:	230 Vac
Max. current per contact:	6 A
Utilization category	C300

Notes:
- Use 60° or 75 °C copper (Cu) conductor, rigid or flexible, wire size AWG 30-12.
- Terminal tightening torque of 5-7 Lb In.
- Only for 24 Vac/dc version, supply from remote class 2 source or limited voltage and limited energy. (Supply from Remote Class 2 Source or limited voltage limited energy).

Expansion module CS ME-03

Terminal layout

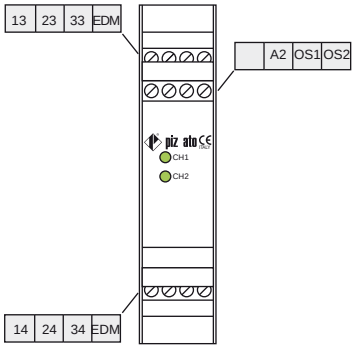

Operation diagram

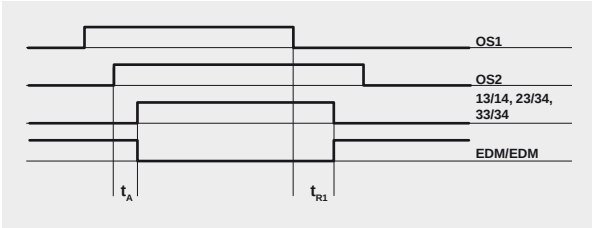

Legend:
t_A: operating time
t_{R1}: releasing time

Internal diagram

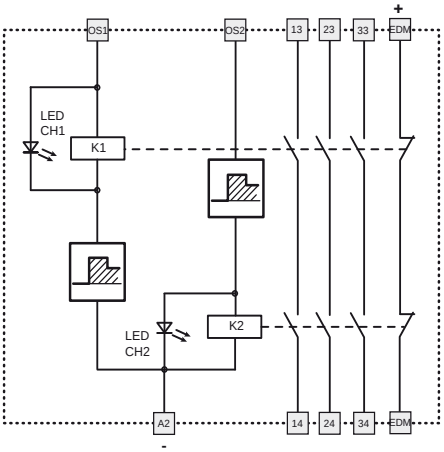

Input configuration

Solid state output circuits (e.g. light curtains)	
1 channel	2 channels

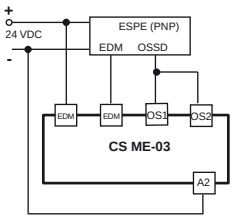

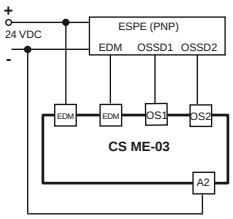

The diagram does not show the exact position of terminals in the product

Expansion module **CS ME-20**

Expansion module with delayed output contacts at de-energizing

Main features
- For safety applications up to SIL CL 3/PL e
- Possibility of control with one or two channels
- 4 delayed time 0.5 - 1 - 2 and 3 s
- Small 22.5 mm housing
- Output contacts:
  4 NO safety contacts,
  2 NC auxiliary contacts,
  1 NC feedback contact
- Supply voltage: 24 Vdc

Utilization categories
Alternating current: AC15 (50...60 Hz)
Ue (V) 230
Ie (A) 3
Direct current: DC13 (6 op. cycles/minute)
Ue (V) 24
Ie (A) 4

Markings, quality marks and certificates:

UL approval:	E131787
EAC approval:	RU C-IT ДМ94.В.01024
CCC approval:	2013010305640211

In conformity with the requirements of:
Low Voltage Directive 2006/95/EC,
Machinery Directive 2006/42/EC,
EMC Directive 2004/108/EC

Technical data

Housing
PA 6.6 polyamide housing, self-extinguishing, V0 acc. to UL 94

Protection degree:	IP40 (housing), IP20 (terminal strip)
Dimensions:	see page 283, design A

General data

SIL CL:	up to SIL CL 3 acc. to EN 62061
Performance Level (PL):	up to PL e acc. to EN ISO 13849-1
Safety category:	up to cat. 4 acc. to EN ISO 13849-1 (see base module category)
Safety parameters:	see page 333
Ambient temperature:	-25°C...+55°C
Mechanical endurance:	>10 million operating cycles
Electrical endurance:	>100,000 operating cycles
Pollution degree:	external 3, internal 2
Impulse voltage (Uimp):	4 kV
Rated insulation voltage (Ui):	250 V
Overvoltage category:	II
Weight:	0.2 kg

Supply

Rated supply voltage (Un):	24 Vdc
DC maximum residual ripple:	10%
Supply voltage tolerance:	±15% of Un
DC consumption:	< 2 W

Control circuit

Maximum input resistance:	≤ 50 Ω
Operating time t_A:	< 100 ms
Releasing time in absence of power supply t_R:	see Code structure

In conformity with standards:
EN 60204-1, EN ISO 13855, EN 1037, EN ISO 12100, EN ISO 13850, EN 60529, EN 61000-6-2, EN 61000-6-3, EN 62326-1, EN 60664-1, EN 60947-1, EN ISO 13849-1, EN ISO 13849-2, EN 62061, UL 508, CSA C22.2 n° 14-95

Output circuit

Output contacts:	4 NO safety contacts, 2 NC auxiliary contacts, 1 NC feedback contact
Contact type:	forcibly guided
Contact material:	gold-plated silver alloy
Maximum switching voltage:	230/240 Vac; 300 Vdc
Max. current per contact:	6 A
Conventional free air thermal current Ith:	6 A
Max. total current Σ Ith^2:	64 A^2
Minimum current:	10 mA
Contact resistance:	≤ 100 mΩ
External protection fuse:	4 A

Code structure

CS ME-20VU24-TF1

Connection type	
V	screw terminals
M	connector with screw terminals
X	connector with spring terminals

Releasing time in absence of power supply (t_R)	
TF0.5	0.5 s fixed time
TF1	1 s fixed time
TF2	2 s fixed time
TF3	3 s fixed time

Characteristics approved by UL

Rated supply voltage (Un):	24 Vdc
DC consumption:	< 2 W
Maximum switching voltage:	230 Vac
Max. current per contact:	6 A
Utilization category	C300

Notes:
- Use 60° or 75 °C copper (Cu) conductor, rigid or flexible, wire size AWG 30-12.
- Terminal tightening torque of 5-7 Lb In.
- Only for 24 Vac/dc version, supply from remote class 2 source or limited voltage and limited energy. (Supply from Remote Class 2 Source or limited voltage limited energy).

Expansion module CS ME-20

Terminal layout

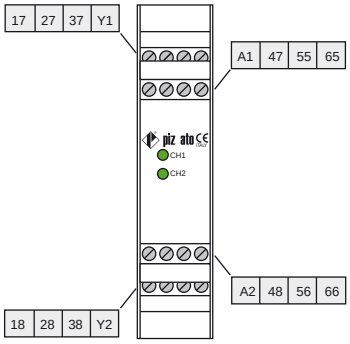

Operation diagram

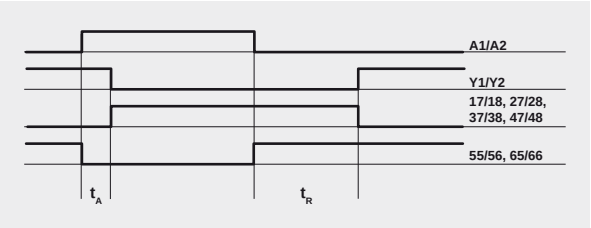

Legend:
t_A: operating time
t_R: releasing time in absence of power supply (see "Code structure")

Internal diagram

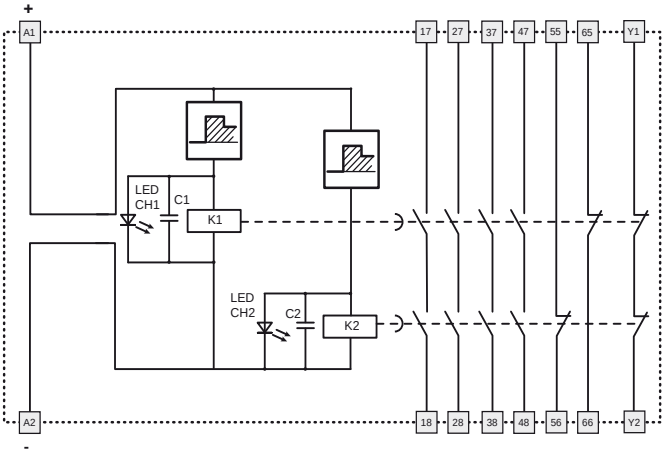

Input configuration

Single channel control	Double channel control

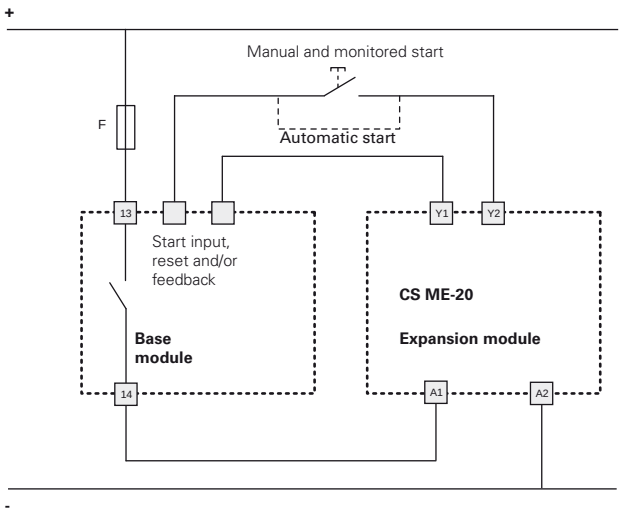

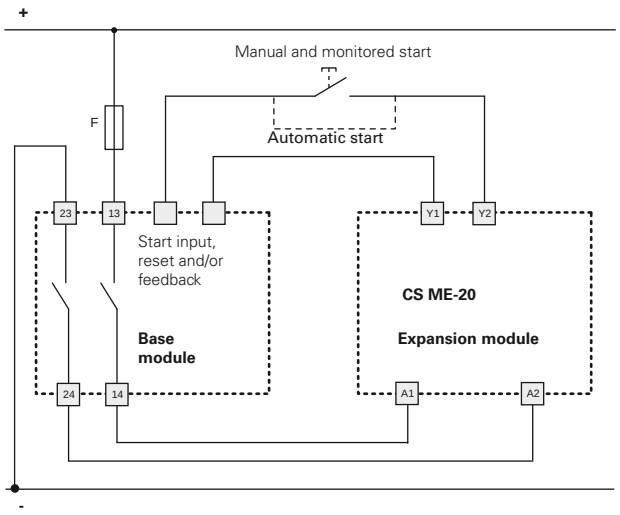

The diagram does not show the exact position of terminals in the product

Expansion module **CS ME-30 / CS ME-31**

Expansion module with delayed output contacts at de-energizing

Main features
- For safety applications up to SIL CL 3/PL e
- Possibility of control with one or two channels
- Fixed or adjustable delayed time
- 45 mm housing
- Output contacts:
  4 NO safety contacts,
  2 NC auxiliary contacts,
  1 NC feedback contact
- Supply voltage: 24 Vdc

Utilization categories
Alternating current: AC15 (50...60 Hz)
Ue (V) 230
Ie (A) 3
Direct current: DC13 (6 op. cycles/minute)
Ue (V) 24
Ie (A) 4

Markings, quality marks and certificates:

UL approval:	E131787
EAC approval:	RU C-IT ДМ94.В.01024
CCC approval:	2013010305640211

In conformity with the requirements of:
Low Voltage Directive 2006/95/EC,
Machinery Directive 2006/42/EC,
EMC Directive 2004/108/EC

Technical data

Housing
PA 6.6 polyamide housing, self-extinguishing, V0 acc. to UL 94

Protection degree:	IP40 (housing), IP20 (terminal strip)
Dimensions:	see page 284, design C

General data

SIL CL:	up to SIL CL 3 acc. to EN 62061
Performance Level (PL):	up to PL e acc. to EN ISO 13849-1
Safety category:	up to cat. 4 acc. to EN ISO 13849-1 (see base module category)
Safety parameters:	see page 333
Ambient temperature:	-25°C...+55°C
Mechanical endurance:	>10 million operating cycles
Electrical endurance:	>100,000 operating cycles
Pollution degree:	external 3, internal 2
Impulse voltage (Uimp):	4 kV
Rated insulation voltage (Ui):	250 V
Overvoltage category:	II
Weight:	0.4 kg

Supply

Rated supply voltage (Un):	24 Vdc
DC maximum residual ripple:	10%
Supply voltage tolerance:	±15% of Un
DC consumption:	< 2 W

Control circuit

Maximum input resistance:	≤ 50 Ω
Operating time t_A:	< 200 ms
Releasing time in absence of power supply t_R:	see Code structure

In conformity with standards:
EN 60204-1, EN ISO 13855, EN 1037, EN ISO 12100, EN ISO 13850, EN 60529, EN 61000-6-2, EN 61000-6-3, EN 62326-1, EN 60664-1, EN 60947-1, EN ISO 13849-1, EN ISO 13849-2, EN 62061, UL 508, CSA C22.2 n° 14-95

Output circuit

Output contacts:	4 NO safety contacts, 2 NC auxiliary contacts, 1 NC feedback contact
Contact type:	forcibly guided
Contact material:	gold-plated silver alloy
Maximum switching voltage:	230/240 Vac; 300 Vdc
Max. current per contact:	6 A
Conventional free air thermal current Ith:	6 A
Max. total current Σ Ith^2:	64 A^2
Minimum current:	10 mA
Contact resistance:	≤ 100 mΩ
External protection fuse:	4 A

Code structure

CS ME-30VU24-TF1

Fixed or selectable time	
0	fixed time
1	selectable time

Connection type	
V	screw terminals
M	connector with screw terminals
X	connector with spring terminals

Releasing time in absence of power supply (t_R)	
TF1	1 s fixed time (only CS ME-30)
...	.....
TF12	12 s fixed time (only CS ME-30)
TS12	time selectable from 1 to 12 s, 1 s step (CS ME-31 only)

Characteristics approved by UL

Rated supply voltage (Un):	24 Vdc
DC consumption:	< 2 W
Maximum switching voltage:	230 Vac
Max. current per contact:	6 A
Utilization category	C300

Notes:
- Use 60° or 75 °C copper (Cu) conductor, rigid or flexible, wire size AWG 30-12.
- Terminal tightening torque of 5-7 Lb In.
- Only for 24 Vac/dc version, supply from remote class 2 source or limited voltage and limited energy. (Supply from Remote Class 2 Source or limited voltage limited energy).

Expansion module CS ME-30 / CS ME-31

Terminal layout

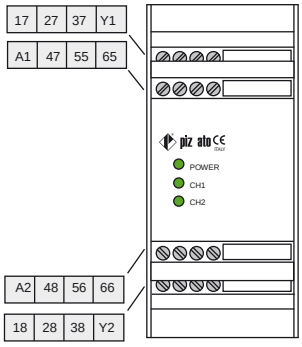

CS ME-30

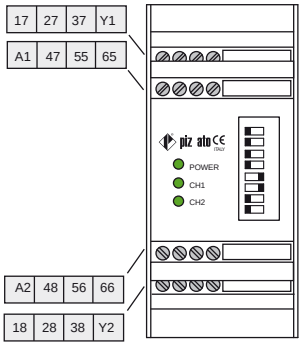

CS ME-31

Operation diagram

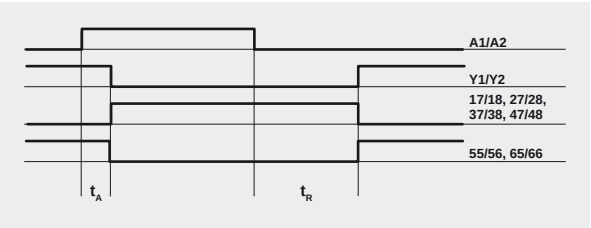

Legend:
t_A: operating time
t_R: releasing time in absence of power supply (see "Code structure")

Release time selection t_R (CS ME-31 only)

	DIP SWITCH	t_R (s)
ON / OFF	■ ■ / ■ ■ ■ ■ ■ ■	1
ON / OFF	■ ■ / ■ ■ ■ ■ ■ ■	2
ON / OFF	■ ■ / ■ ■ ■ ■ ■ ■	3
ON / OFF	■ ■ / ■ ■ ■ ■ ■ ■	4
ON / OFF	■ ■ / ■ ■ ■ ■ ■ ■	5
ON / OFF	■ ■ / ■ ■ ■ ■ ■ ■	6
ON / OFF	■ ■ / ■ ■ ■ ■ ■ ■	7
ON / OFF	■ ■ / ■ ■ ■ ■ ■ ■	8
ON / OFF	■ ■ / ■ ■ ■ ■ ■ ■	9
ON / OFF	■ ■ / ■ ■ ■ ■ ■ ■	10
ON / OFF	■ ■ / ■ ■ ■ ■ ■ ■	11
ON / OFF	■ ■ / ■ ■ ■ ■ ■ ■	12

Internal diagram

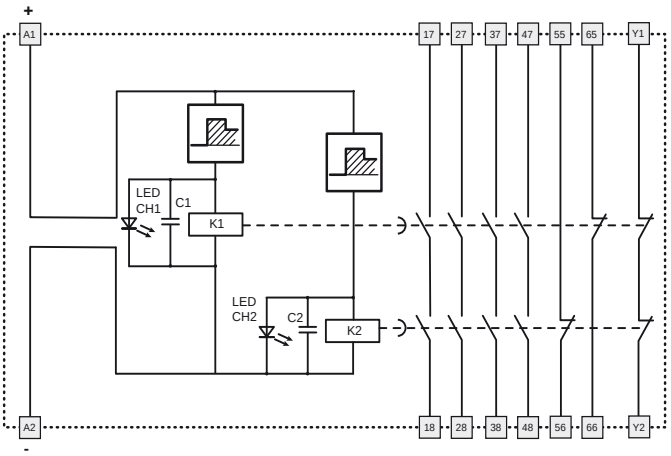

Input configuration

Single channel control

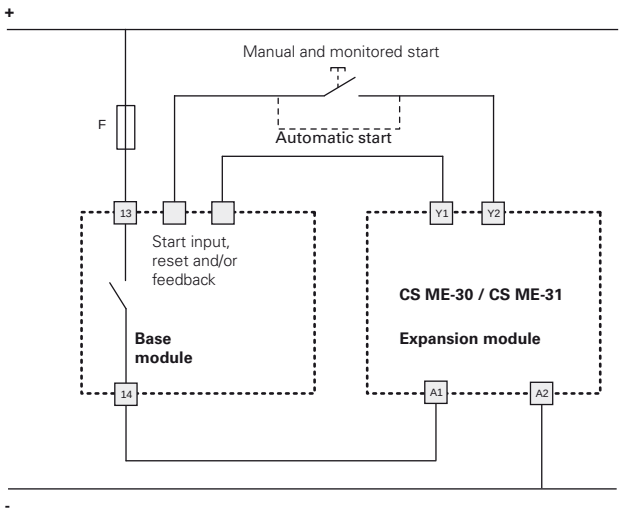

Double channel control

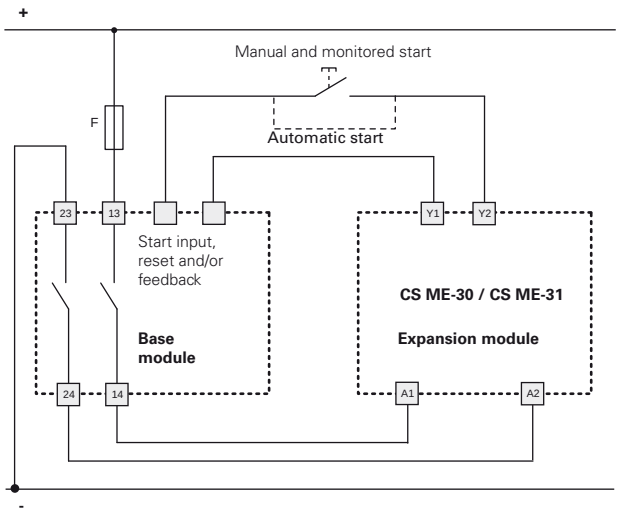

The diagram does not show the exact position of terminals in the product

Application examples

Increasing the number and the load capacity of the contacts with external contactors

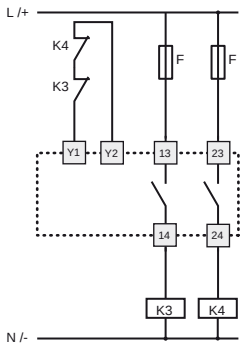

If necessary the number and the load capacity of output contacts can be increased by using expansion modules or contactors with forcibly guided contacts. For control of the external contactors, a NC contact of each relay is connected to the safety module feedback circuit between the start button terminals.

The following installation examples contemplate the use of the CS AR-08•••• module. For the use of other modules, see characteristics, compatibility and internal diagram of each single module.

Application examples: safety gates monitoring, up to category 4 according to EN ISO 13849-1

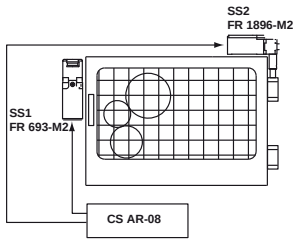

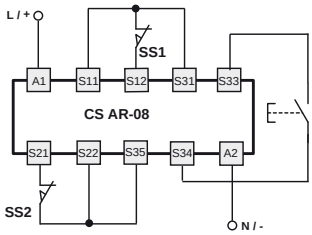

Compatible modules
CS AR-01•••• CS AR-02••••
CS AR-04•••• CS AR-05••••
CS AR-06•••• CS AR-07••••
CS AR-08•••• CS AT-0•••••
CS AT-1••••• CS AT-3•••••
CS AR-91•024

Monitoring of one movable guard through two switches with different technology. System in safety category 4.

Application examples: safety magnetic sensors monitoring, up to category 4 according to EN ISO 13849-1

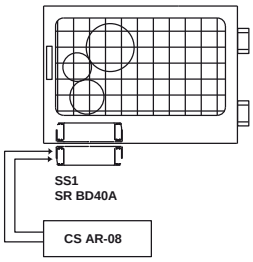

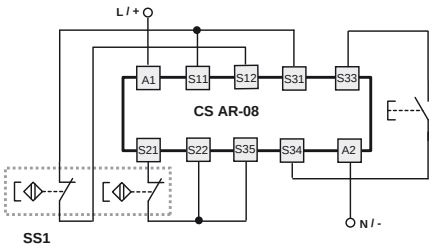

Compatible modules
CS AR-01•E02 CS AR-02•E02
CS AR-04•024 CS AR-05••••
CS AR-06•••• CS AR-08••••
CS AT-0••••• CS AT-1•••••
CS AT-3••••• CS AR-91•024

Monitoring of one movable guard through one coded magnetic sensor. System in safety category 4.

Application examples: light barrier monitoring, up to category 4 according to EN ISO 13849-1

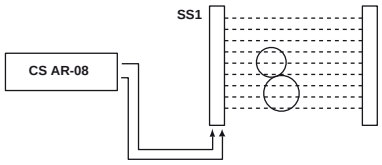

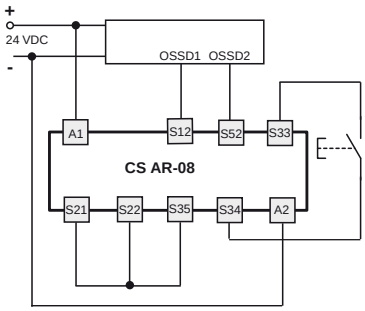

Compatible modules
CS AR-05•••• CS AR-06••••
CS AR-08•••• CS AT-0•••••
CS AT-1•••••

Solid state output circuits (e.g. light curtains) with two OSSD outputs. System in safety category 2 or 4 according to the barrier.

Application examples: monitoring of a switch and an emergency button for emergency stop, up to cat. 3 according to EN ISO 13849-1

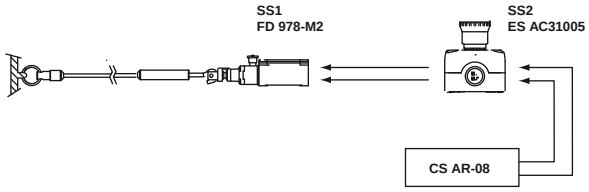

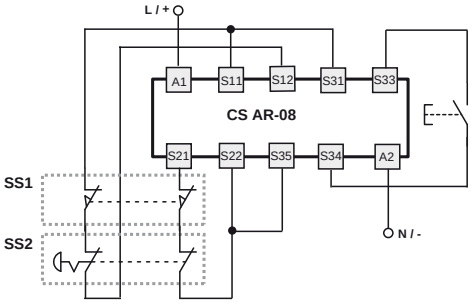

Compatible modules
CS AR-01•••• CS AR-02•••• CS AR-04•••• CS AR-05••••
CS AR-06•••• CS AR-07•••• CS AR-08•••• CS AR-20••••
CS AR-21•••• CS AR-22•••• CS AR-23•••• CS AR-24••••
CS AR-25•••• CS AT-0••••• CS AT-1••••• CS AT-3•••••
CS AR-91•024

Application examples: monitoring of a series of switches and magnetic sensors, up to cat. 3 according to EN ISO 13849-1

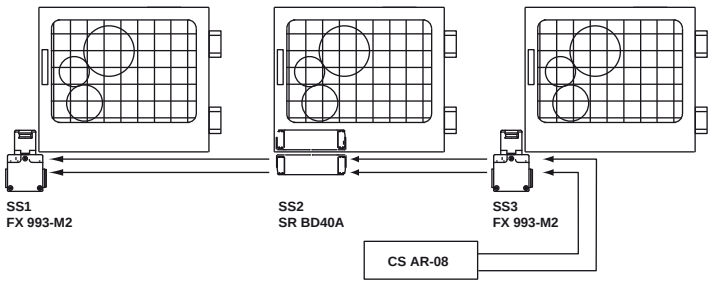

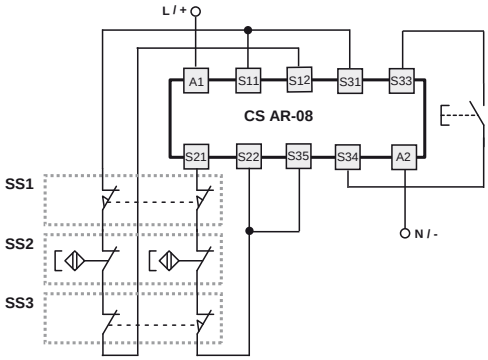

Compatible modules
CS AR-01•E02 CS AR-02•E02 CS AR-04•024 CS AR-05••••
CS AR-06•••• CS AR-08•••• CS AT-0••••• CS AT-1•••••
CS AT-3••••• CS AR-91•024

Monitoring of more guards through switches and magnetic sensors. System in category 3.
- The use of one single switch for guard requires that in the risk analysis stage it would be possible to exclude the mechanical breaking of the same.
- The sensor must have double coded channel.
- Verify possible requirements of the type C standard concerning own machinery.

Application examples: possibility of parallel module reset, up to category 4 according to EN ISO 13849-1

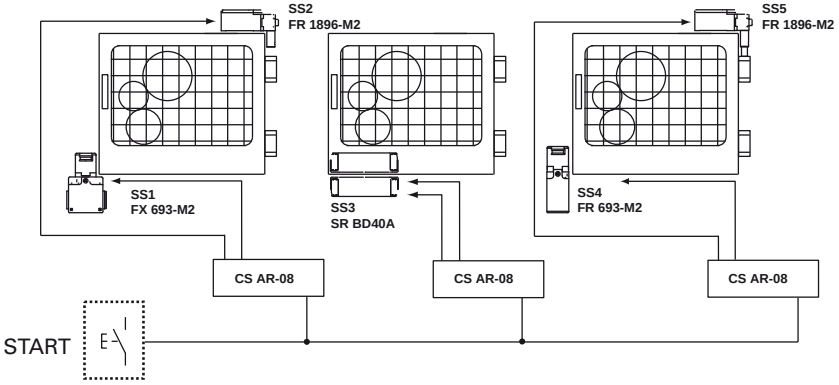

Monitoring of more guards through different technologies. System in safety category 4. The example shows the possibility of a contemporaneous reset of several modules via a single contact of a button.

Compatible modules
CS AR-04•024 CS AR-05•024 CS AR-06•024
CS AR-08•024 CS AR-91•024

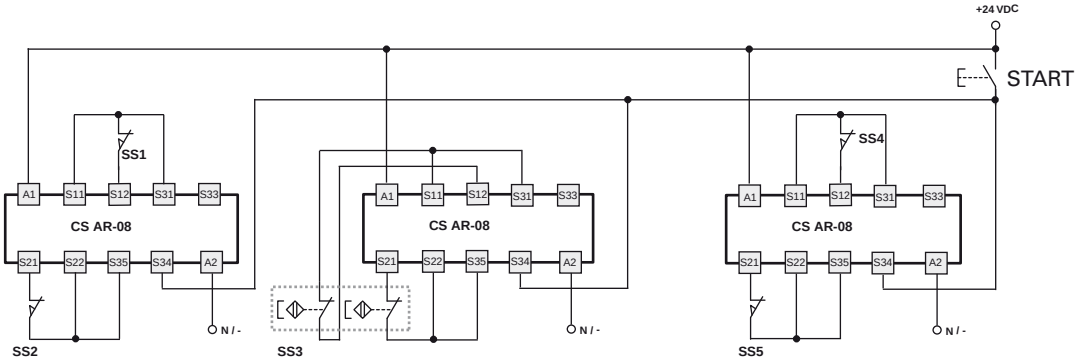

Programmable multifunctional safety modules **CS MP**

Introduction

GEMNIS

A **Gemnis** series module is a programmable safety devices, which allows several safety functions to be carried out simultaneously. This product series has been developed specifically to meet the needs of machinery manufacturers with a low to average number of safety functions. As an indication, these modules can manage small applications which are equivalent to the functions carried out by 3 to 4 traditional electromechanical safety modules, up to circuits with dozens of inputs.
Gemnis series safety modules can implement safety circuits with a safety category of up to SIL 3 acc. to EN 62061, PL e and category 4 acc. to EN ISO 13849-1.

The **Gemnis** series of safety modules has been updated to **version 11** which introduces new functions and improved hardware- and software-level performance.
This update considerably increases the application potential of these products.

The **Gemnis Studio** program is a graphic development environment for the creation, simulation and debugging of programs designed for insertion in Gemnis line modules.
This software is licensed to users wishing to program these modules, subject to prior registration at **www.gemnis.com**.
You can download the new **Gemnis Studio** software version (**Gemnis Studio 11**) from the site, which will allow you to program both current, **Gemnis K11**-designated modules, as well as previous ones.

General data of safety modules

Gemnis series modules can manage all of the following safety device types:
- Mechanic safety switches
- Switches with solenoid for guard locking
- Magnetic safety switches
- Optic safety barriers or optic safety sensors (in category 4)
- Safety sensors
- Emergency stop mushroom buttons
- Emergency stop rope switches
- Safety mats or safety bumpers with 4-wire technology
- Category IIIA or IIIC two-hand controls
- Safety selectors
- Enabling devices
- NEW > 4-20 mA analogue sensors (Gemnis Studio 11)
- NEW > 0-4 kHz frequency signals (Gemnis Studio 11)
- NEW > Two beam muting systems (Gemnis Studio 11).

This modules are also equipped with functionality allowing you to also implement:
- Safety timing
- Detection of various types of faults in safety devices or their connections
- Temperature limit checking inside module
- State communications via USB port.

Finally, Gemnis series modules can:
- Manage up to eight different electronic safety outputs or four relay outputs
- Manage various (unsafe) signalling outputs
- State information and data settings via the USB communication port.

Gemnis design safety modules can implement safety circuits with up to SIL CL3 acc. to EN ISO 62061, PL e and category 4 acc. to EN ISO 13849-1.

Website

This product line is supported online via the **www.gemnis.com** website, where you can:
- Download the gemnis studio installation package (following registration)
- Download support files
- Get the most up to date version of the instruction manual
- Get examples and other support information which will be added over time
- NEW > Watch videos illustrating Gemnis Studio 11 program operation.

Hardware structure of modules

Gemnis design modules are created with increased flexibility - even at the hardware level. These products are made up of various electronic circuit boards which are sold in various combinations, but which are always contained in a single housing and with one unique product code.
The Gemnis line modules have a general redundant and self monitoring type structure, they are controlled by a pair of processors which simultaneously run the application program and constantly monitor their operation and system integrity in parallel.

Each module is supplied in a single housing, of the minimum width required to house the boards which make up the module. 45 mm to 90 mm wide housings are available. The customer does not need to worry therefore about wiring the various parts.

The USB port integrated within the module is used for programming and debugging of the Gemnis Studio program module. Once a module is programmed, you can also use the USB port for communicating with a PC installed beside the machine, and for the exchange of information relating to the module state.

The main developments introduced at the hardware level by the safety module update to version 11 are:

NEW > • Ability to manage programs up to four times larger
NEW > • The ability, with new dedicated modules, to manage analogue and/or speed inputs
NEW > • Models with 8 safe electronic outputs
NEW > • New module configurations available (following table).

Module	I type inputs	J type inputs	C type inputs	F type inputs	T test signals	OS safety outputs	O signalling outputs	Port	Width (mm)	Page
CS MP201M0	8	-	-	-	8	3NO	4	USB	45	249
CS MP202M0	16	-	-	-	4	4 PNP	4	USB	45	250
CS MP203M0	12	-	-	-	4	3NO + 1NO	4	USB	45	251
CS MP204M0	12	-	-	-	4	3NO	4	USB	45	252
CS MP205M0	4	4	-	4	4	4 PNP	4	USB	45	253
CS MP206M0	8	-	-	-	4	4 PNP	12	USB	45	254
CS MP207M0	4	-	2	-	4	4 PNP	4	USB	45	255
CS MP208M0	16	-	-	-	4	8 PNP	-	USB	45	256
CS MP301M0	24	-	-	-	8	3NO	4	USB	67.5	257
CS MP302M0	24	-	-	-	12	4 PNP	4	USB	67.5	258
CS MP303M0	32	-	-	-	4	4 PNP	4	USB	67.5	259
CS MP304M0	28	-	-	-	4	3NO + 1NO	4	USB	67.5	260
CS MP305M0	24	-	-	-	4	4 PNP	12	USB	67.5	261
CS MP306M0	20	-	-	-	4	3NO + 1NO	12	USB	67.5	262
CS MP307M0	8	4	2	4	4	4 PNP	4	USB	67.5	263
CS MP308M0	24	-	-	-	4	8 PNP	8	USB	67.5	264
CS MP309M0	32	-	-	-	4	8 PNP	-	USB	67.5	265
CS MP401M0	40	-	-	-	4	4 PNP	12	USB	90	266
CS MP402M0	32	-	-	-	12	8 PNP	8	USB	90	267
CS MP403M0	40	-	-	-	4	8 PNP	8	USB	90	268

I = Digital inputs
J = Decoupled digital inputs
C = 4-20 mA type analogue signal inputs
F = 0 to 4 kHz frequency signal inputs

T = Test signals
OS = OSSD (PNP) safety outputs
nn = Relay safety outputs
O = PNP signalling outputs

Gemnis Studio software

Gemnis Studio is software designed to allow the user to program a module belonging to the Gemnis line. This software has a graphical interface to visually display, in a natural and intuitive way, the assembly of operations that the application program will execute, once loaded to the module. Gemnis Studio allows you to attach supporting information and useful notes to the configuration information, for overall understanding of the program. Gemnis Studio also allows you to check correct application program operation prior to sending it to the module via the simulation.
Finally, Gemnis Studio allows you to carry out monitoring and detection operations, and to graphically represent the state of an actively operational device in real time.

Desktop

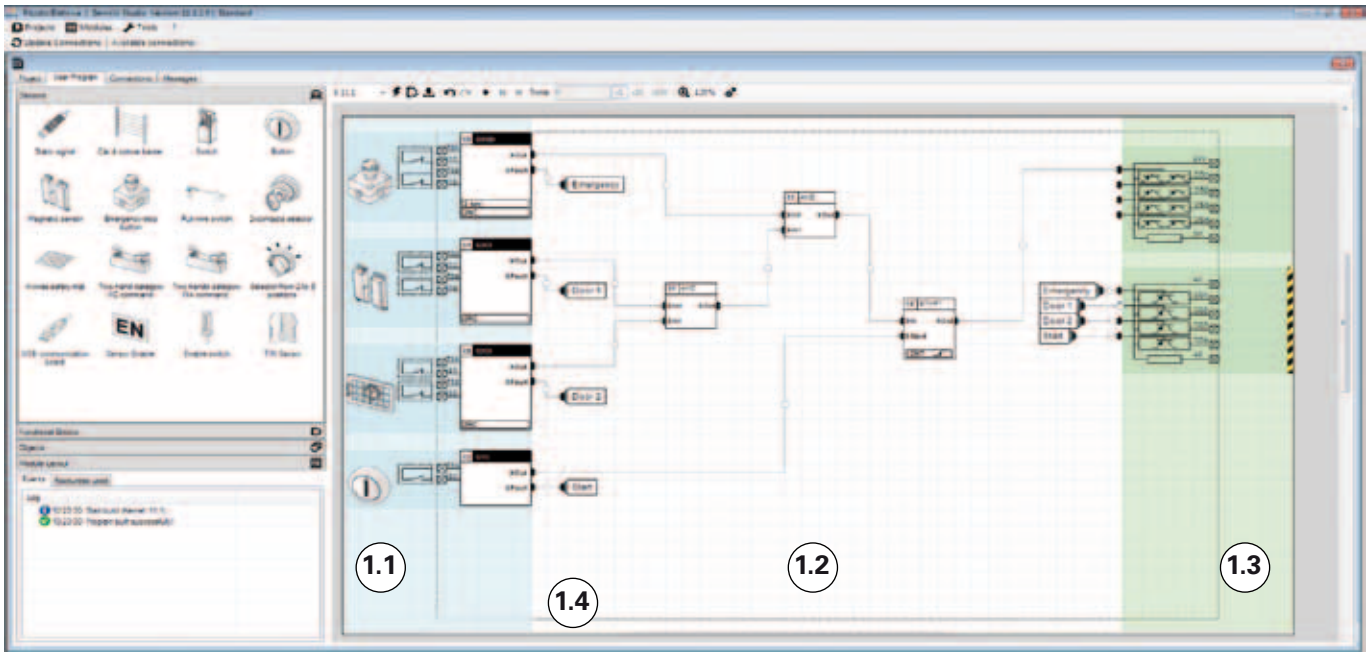

The Gemnis Studio software has been designed with the objective of making Gemnis series module operation as immediate and visual as possible. With this aim, we decided to create a work environment – the Desktop – where, as far as possible, the user can amass all the information required to actually "view" and not just "imagine" the behaviour of the project under development. This is the reason we have made room for graphical object representations, of the physical characteristics of the module in use, and immediate interaction, by means of simulation, with the created program.
The desktop is the main user work area, the zone where the flow and processing to be applied to the data detected by the module are defined using the graphical program interface.

The desktop is divided into three parts:
1.1) the sensors zone
1.2) the functional blocks zone
1.3) the outputs zone

In the sensor zone (1.1) the user indicates the external device types connected to the module terminals, and all the parameters needed to define them.
In the output zone (1.3) all the output devices present in the selected module (relays, transistors etc.) are immediately shown.
In the function block zone (1.2) the user will enter all the logical functions needed to process the flow of data coming from the sensors, and will proceed to make the connections to transfer this data between the objects in the desktop and finally to the outputs.
The desktop includes a dotted box (1.4) which represents the area "occupied by the module", or, everything enclosed within the physical module, from terminals to code. The area outside this box, meanwhile, is occupied by images of the physical devices external to the module (switches, buttons, etc.), illustrating their expected internal structure and any description.
At the user's request, the desktop content is compiled and, provided there are no errors, it is translated into the application program. If a module is connected to the computer, you can immediately transfer the application program to it, and thereby check its effective operation in the field.
Otherwise it is possible to simulate application program operation directly on the desktop, by interacting with the sensors and evaluating their effects graphically.

Project

The collection of information required to configure a module and describe its activities is called a "Project". Using Gemnis Studio, the user can assemble the textual and graphical information required to elaborate and comment the functions which will be carried out by the program, once installed on a Gemnis line module.

Printing

Gemnis Studio can generate a Connection Report, which includes all module terminals connections, and a user Program Report, allowing you to print the Application Program.

Password

The password gives the option of protecting a module's interaction capacity, and the ability to modify the project file.

Sensors

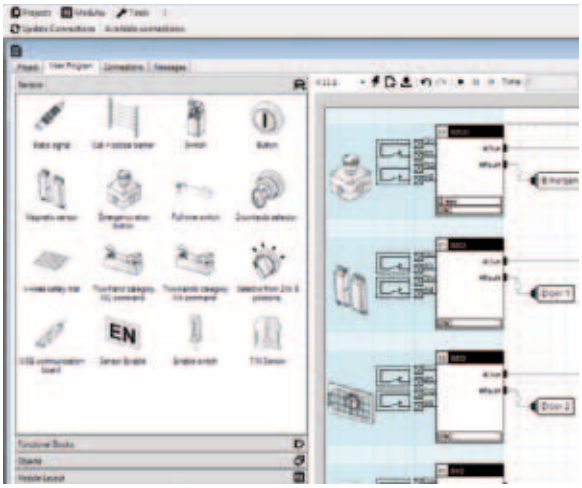

The sensor zone indicates the external device types which can be connected to the module terminals, and all the parameters needed to define them.
Each sensor created displays a view of the internal contact configuration and of how the contacts are connected to the module terminals, a box with the associated safety function, and the parameters selected for the function.
From the sensor panel, you can select a sensor using the mouse and drag it into the dedicated desktop area.
A full list of available sensors is shown to the side here.

Sensor list

Electrical type	Diagram	Examples	
Sensor with 1 non-testable channel			
Sensor with 2 non-testable channels and interdependent signals			
Sensor with 1 tested channel			
Sensor with 2 independent tested channels			
Sensor with 2 dependent tested channels			
Sensor with 2 always-closed tested channels and short circuit permitted between the channels			
Sensor with 2 tested channels which can be crossed			
Sensor with 2 tested channels which cannot be crossed			
Sensor with 2 to 8 tested channels which cannot be crossed and which may only be active one at a time			
Sensor with 2 tested channels which cannot be crossed and which must follow a very precise activation/deactivation sequence made up of three states: rest, work, stop			
Dual temperature sensor integrated in module			< NEW
Monitoring of a pair of analogue sensors with 4-20 mA output in both 2-wire and 3-wire versions			< NEW
Monitoring of a pair of signals in frequencies up to 4 KHz			< NEW

Function blocks

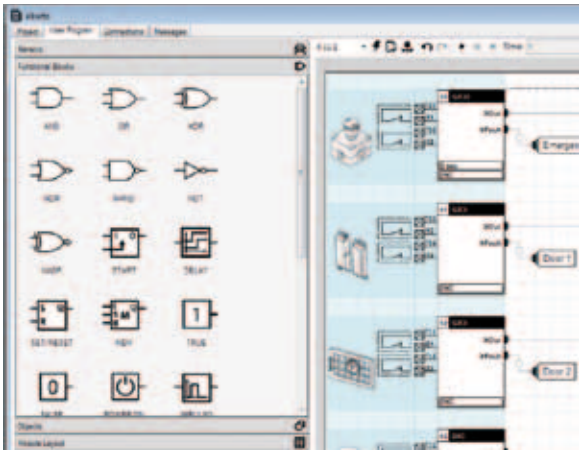

The function blocks represent all the logic functions required to process the data flow between sensors and outputs.
From the function block panel, a block can be selected using the mouse and dragged into the dedicated desktop area.
A full list of available function blocks is shown to the side here.

Block list

- AND — Basic boolean function
- OR — Basic boolean function
- XOR — Basic boolean function
- NOR — Basic boolean function
- NAND — Basic boolean function
- NOT — Basic boolean function
- NXOR — Basic boolean function
- START — Control function
- DELAY — Returns a Delay Off or Delay On-type signal
- SET/RESET — Basic logical memory function
- TRUE / FALSE — Basic boolean function
- POWER ON — Active signal at first execution cycle
- PULSE — Returns a Delay Off-type signal on the preselected input edge
- CLOCK — Generates pulses at pre-established fixed intervals
- ERROR — Puts the module into Error State
- LKTBL — Conversion table between same type data
- GEQ/EQU/LEQ — Carries out a numerical comparison between two B or W-type values and displays the result in boolean format (X)
- MESSAGE — Transmits a message on the USB and COM ports
- COUNTER — Pulse counter
- TRIGGER — Detects the edge, either rising or falling, of an input signal
- FILTER — Filters a signal from interference for a duration lower than set time
- LDC — Upstream function block for monitoring of a door-locking system
- WAVE — Generates a waveform with variable period and ON time < NEW
- MUTE2 — Upstream function block for monitoring of a 2-beam muting system < NEW

Simulation

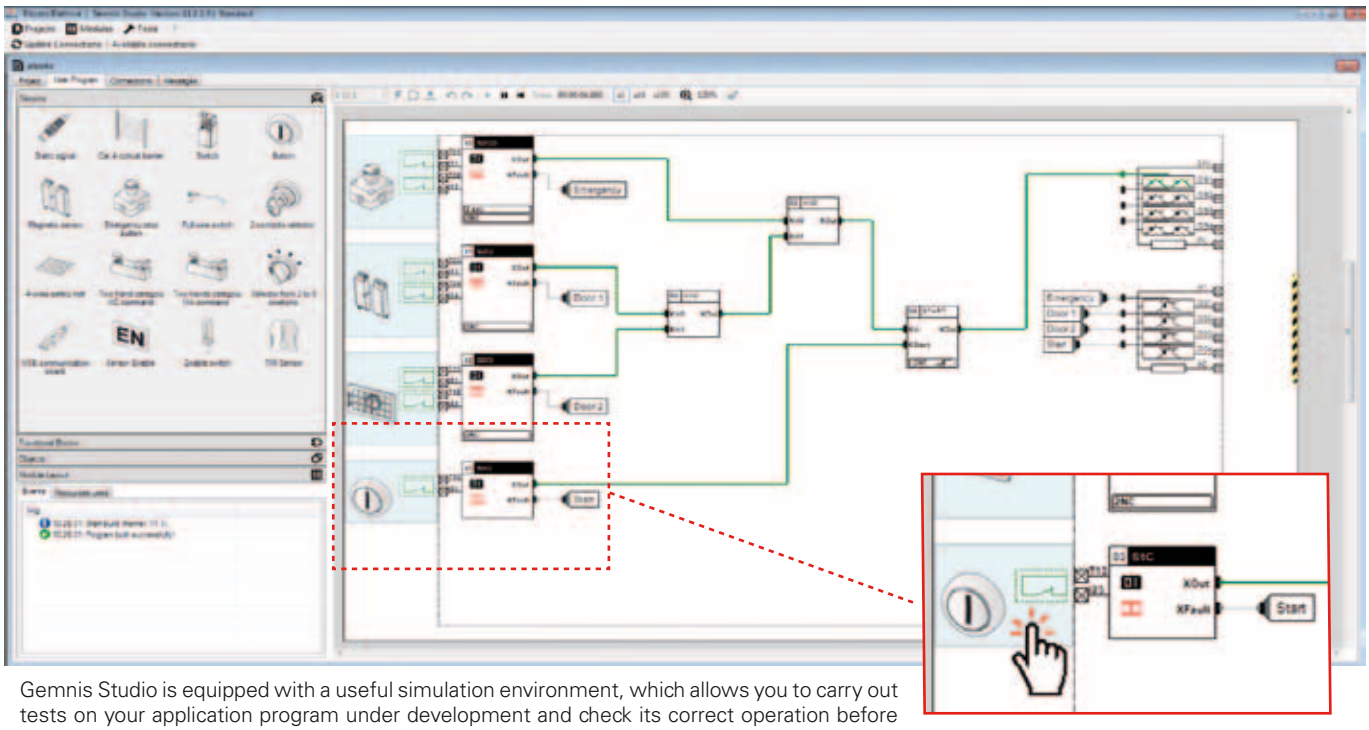

Gemnis Studio is equipped with a useful simulation environment, which allows you to carry out tests on your application program under development and check its correct operation before you install it to a module. To run an application program simulation during the development phase, simply press the Start button on the toolbar at the top of the desktop. If the application program cannot compile, the simulation will not run.

The launch of the simulation phase transforms the desktop and how you interact with it. During this phase you can simulate module operation by interacting with the sensors and recreating real world conditions or operations. Clicking on the sensors will make them execute, in sequence, the standard events for each sensor. Each of these interactions modifies the state of the sensor output variables which, via the connectors, will become the input variables of the function blocks, which will evaluate them and so on, until the data arrives at the outputs that will or will not activate. This simulates exactly what will happen in the module.

Transmission of the information via the connectors is visible via colour change of the connectors.

Monitor

You can monitor operation of one or more Gemnis modules in real time using the Monitor function.
You can observe the overall operation state of the module and various data relating to the program being executed, including a list of most recently saved programs. You can view real time implementation status of the module program, inputs and outputs. In Gemnis Studio 11 the video data update has been made faster and for the analysis of large projects, graphical pan & zoom functions are also available in the Monitor.

Technical support

A technical support service is currently provided free of charge to users who have registered on the site and have activated Gemnis Studio using the activation process.
Gemnis Studio can operate in two modes: Demo mode and Standard mode.

The version downloaded from the site operates initially in demo mode, which does not allow saving of projects or sending of a new project to a Gemnis series module.
Demo mode still allows creation and simulation of a project or sending of an existing project to a Gemnis series module. The demo version is almost a fully functional product but the only support provided is via the online help, and any other information which is freely available on the www.gemnis.com site.

The Gemnis Studio demo version program is enabled in standard mode, i.e. becomes fully operational, via an activation process that requires direct connection (via USB) with any Gemnis series module. This procedure generates a code that must be provided when requesting technical assistance.

In practice, the purchase of a module allows full operation of the Gemnis Studio program (including saving the project) and enables the user to request additional information from the Pizzato Elettrica Help Desk. The information requested must be relevant to the functionality of the module. We do not provide a consulting service based on the customer's application.

Online support

The site www.gemnis.com contains video tutorials illustrating Gemnis Studio 11 program operation (for example how to activate the program and then go from the DEMO version to STANDARD Gemnis Studio or how to create a new project).

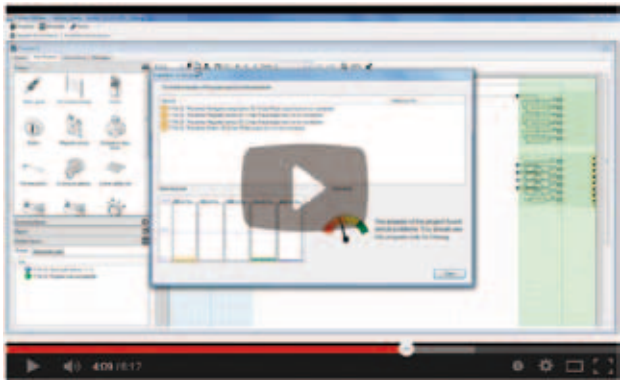

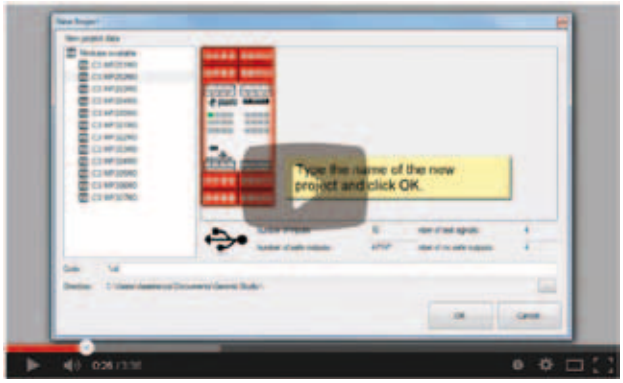

Programmable multi function safety module **CS MP201M0**

Main features
- For safety applications up to SIL CL 3/PL e
- Supply voltage: 24 Vdc
- Gemnis Studio for easy and intuitive programming and program simulation
- Wide availability of logical blocks for the management of external devices and programs
- Custom configured versions available on request

General technical data

Parameter:	Value:	Page:
SIL CL acc. to EN IEC 62061	up to SIL CL 3	
Performance Level (PL) acc. to EN ISO 13849-1	up to PL e	
Safety category acc. to EN ISO 13849-1	up to cat. 4	
MTTFd	133	
PFHd	4.54E-10	
Response time of the system	< 30 ms	
Dimensions (HxLxW)	111.5x45x99 mm	
Housing data		269 s. 1
Environmental data		269 s. 2
Supply		269 s. 3
In conformity with standards		269 s. 4
Programming software	Gemnis Studio	269 s. 5
USB port	Yes	
Safety inputs (Ix)	8	269 s. 6
Test outputs (Tx)	8	269 s. 10
Semiconductor signalling output circuits (Ox)	4	270 s. 11
Relay safety output circuits	3NO	270 s. 14
Weight	300 g	

Markings and quality marks:

UL approval: E131787
EAC approval: RU C-IT ДМ94.В.01024
TÜV SÜD approval: requested

Terminal layout

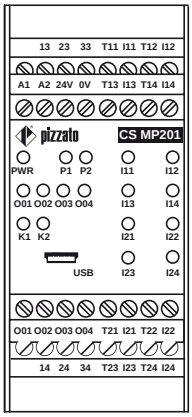

Internal diagram

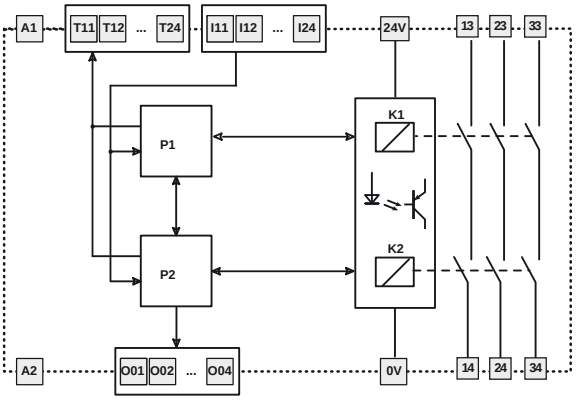

Code structure

CS MP201M0

Connection type	
M	connector with screw terminals
X	connector with spring terminals

Main features

- For safety applications up to SIL CL 3/PL e
- Supply voltage: 24 Vdc
- Gemnis Studio for easy and intuitive programming and program simulation
- Wide availability of logical blocks for the management of external devices and programs
- Custom configured versions available on request

General technical data

Parameter:	Value:	Page:
SIL CL acc. to EN IEC 62061	up to SIL CL 3	
Performance Level (PL) acc. to EN ISO 13849-1	up to PL e	
Safety category acc. to EN ISO 13849-1	up to cat. 4	
MTTFd	573	
PFHd	4.73E-10	
Response time of the system	< 30 ms	
Dimensions (HxLxW)	111.5x45x99 mm	
Housing data		269 s. 1
Environmental data		269 s. 2
Supply		269 s. 3
In conformity with standards		269 s. 4
Programming software	Gemnis Studio	269 s. 5
USB port	Yes	
Safety inputs (Ix)	16	269 s. 6
Test outputs (Tx)	4	269 s. 10
Semiconductor signalling output circuits (Ox)	4	270 s. 11
Semiconductor safety output circuits (OSx)	4 PNP	270 s. 12
Weight	250 g	

Markings and quality marks:

UL approval: E131787
EAC approval: RU C-IT ДМ94.В.01024
TÜV SÜD approval: requested

Terminal layout

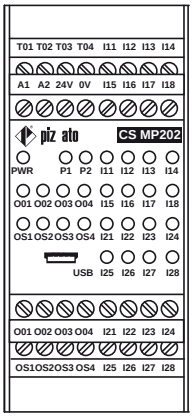

Internal diagram

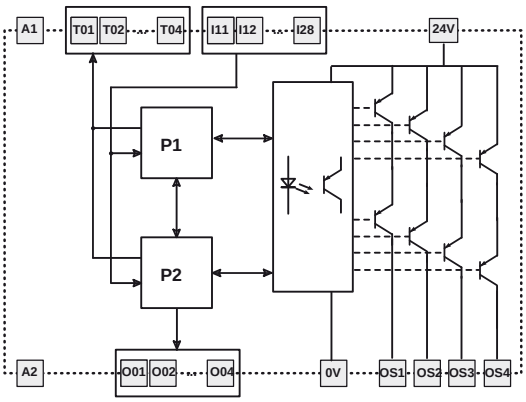

Code structure

CS MP202M0

Connection type	
M	connector with screw terminals
X	connector with spring terminals

Stock items

CS MP202M0

Programmable multi function safety module **CS MP203M0**

Main features
- For safety applications up to SIL CL 3/PL e
- Supply voltage: 24 Vdc
- Gemnis Studio for easy and intuitive programming and program simulation
- Wide availability of logical blocks for the management of external devices and programs
- Custom configured versions available on request

General technical data

Parameter:	Value:	Page:
SIL CL acc. to EN IEC 62061	up to SIL CL 3	
Performance Level (PL) acc. to EN ISO 13849-1	up to PL e	
Safety category acc. to EN ISO 13849-1	up to cat. 4	
MTTFd	101	
PFHd	5.74E-10	
Response time of the system	< 30 ms	
Dimensions (HxLxW)	111.5x45x99 mm	
Housing data		269 s. 1
Environmental data		269 s. 2
Supply		269 s. 3
In conformity with standards		269 s. 4
Programming software	Gemnis Studio	269 s. 5
USB port	Yes	
Safety inputs (Ix)	12	269 s. 6
Test outputs (Tx)	4	269 s. 10
Semiconductor signalling output circuits (Ox)	4	270 s. 11
Relay safety output circuits	3NO+1NO	270 s. 14
Weight	300 g	

Markings and quality marks:

UL approval: E131787
EAC approval: RU C-IT ДМ94.В.01024
TÜV SÜD approval: requested

Terminal layout

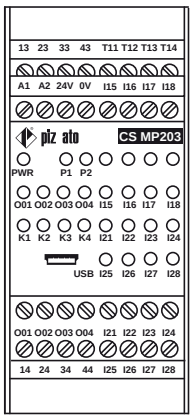

Internal diagram

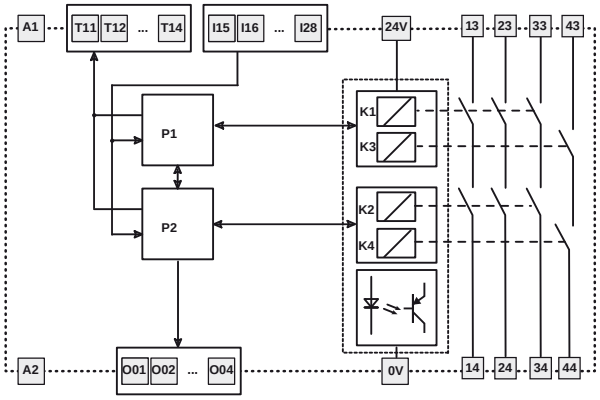

Code structure

CS MP203M0

Connection type	
M	connector with screw terminals
X	connector with spring terminals

Main features

- For safety applications up to SIL CL 3/PL e
- Supply voltage: 24 Vdc
- Gemnis Studio for easy and intuitive programming and program simulation
- Wide availability of logical blocks for the management of external devices and programs
- Custom configured versions available on request

General technical data

Parameter:	Value:	Page:
SIL CL acc. to EN IEC 62061	up to SIL CL 3	
Performance Level (PL) acc. to EN ISO 13849-1	up to PL e	
Safety category acc. to EN ISO 13849-1	up to cat. 4	
MTTFd	132	
PFHd	5.32E-10	
Response time of the system	< 30 ms	
Dimensions (HxLxW)	111.5x45x99 mm	
Housing data		269 s. 1
Environmental data		269 s. 2
Supply		269 s. 3
In conformity with standards		269 s. 4
Programming software	Gemnis Studio	269 s. 5
USB port	Yes	
Safety inputs (Ix)	12	269 s. 6
Test outputs (Tx)	4	269 s. 10
Semiconductor signalling output circuits (Ox)	4	270 s. 11
Relay safety output circuits	3NO	270 s. 14
Weight	300 g	

Markings and quality marks:

UL approval: E131787
EAC approval: RU C-IT ДМ94.В.01024
TÜV SÜD approval: requested

Terminal layout

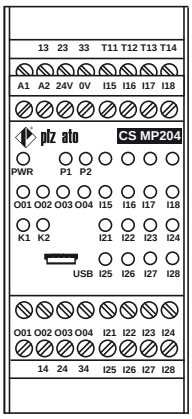

Internal diagram

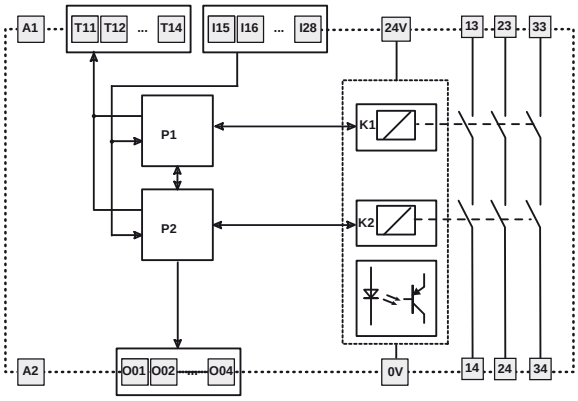

Code structure

CS MP204M0

Connection type	
M	connector with screw terminals
X	connector with spring terminals

Programmable multi function safety module **CS MP205M0**

Main features

- For safety applications up to SIL CL 3/PL e
- Supply voltage: 24 Vdc
- Gemnis Studio for easy and intuitive programming and program simulation
- Wide availability of logical blocks for the management of external devices and programs
- Custom configured versions available on request

Markings and quality marks:

UL approval: E131787
EAC approval: RU C-IT ДМ94.B.01024
TÜV SÜD approval: requested

General technical data

Parameter:	Value:	Page:
SIL CL acc. to EN IEC 62061	up to SIL CL 3	
Performance Level (PL) acc. to EN ISO 13849-1	up to PL e	
Safety category acc. to EN ISO 13849-1	up to cat. 4	
MTTFd	406	
PFHd	4.83E-10	
Response time of the system	< 30 ms	
Dimensions (HxLxW)	111.5x45x99 mm	
Housing data		269 s. 1
Environmental data		269 s. 2
Supply		269 s. 3
In conformity with standards		269 s. 4
Programming software	Gemnis Studio	269 s. 5
USB port	Yes	
Safety inputs (Ix)	4	269 s. 6
Decoupled digital inputs (Jx)	4	269 sez. 7
Inputs for frequency signals from 0 to 4 kHz (Fx)	4	269 sez. 9
Test outputs (Tx)	4	269 s. 10
Semiconductor signalling output circuits (Ox)	4	270 s. 11
Semiconductor safety output circuits (OSx)	4 PNP	270 s. 12
Weight	250 g	

Terminal layout

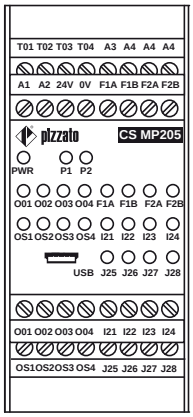

Internal diagram

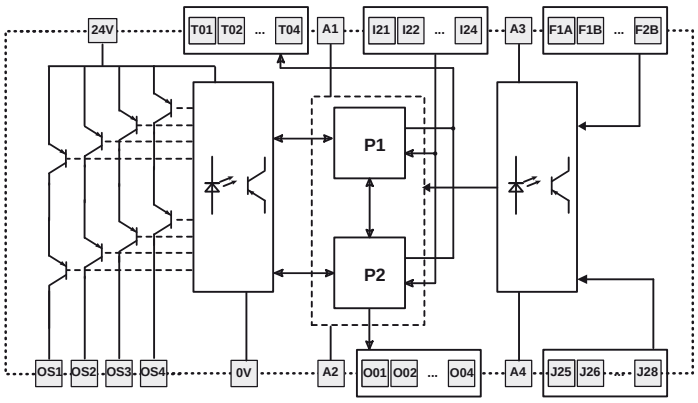

Code structure

CS MP205M0

Connection type	
M	connector with screw terminals
X	connector with spring terminals

Main features

- For safety applications up to SIL CL 3/PL e
- Supply voltage: 24 Vdc
- Gemnis Studio for easy and intuitive programming and program simulation
- Wide availability of logical blocks for the management of external devices and programs
- Custom configured versions available on request

General technical data

Parameter:	Value:	Page:
SIL CL acc. to EN IEC 62061	up to SIL CL 3	
Performance Level (PL) acc. to EN ISO 13849-1	up to PL e	
Safety category acc. to EN ISO 13849-1	up to cat. 4	
MTTFd	643	
PFHd	2.85E-10	
Response time of the system	< 30 ms	
Dimensions (HxLxW)	111.5x45x99 mm	
Housing data		269 s. 1
Environmental data		269 s. 2
Supply		269 s. 3
In conformity with standards		269 s. 4
Programming software	Gemnis Studio	269 s. 5
USB port	Yes	
Safety inputs (Ix)	8	269 s. 6
Test outputs (Tx)	4	269 s. 10
Semiconductor signalling output circuits (Ox)	12	270 s. 11
Semiconductor safety output circuits (OSx)	4 PNP	270 s. 12
Weight	250 g	

Markings and quality marks:

UL approval: E131787
EAC approval: RU C-IT ДМ94.В.01024
TÜV SÜD approval: requested

Terminal layout

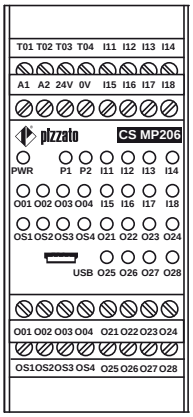

Internal diagram

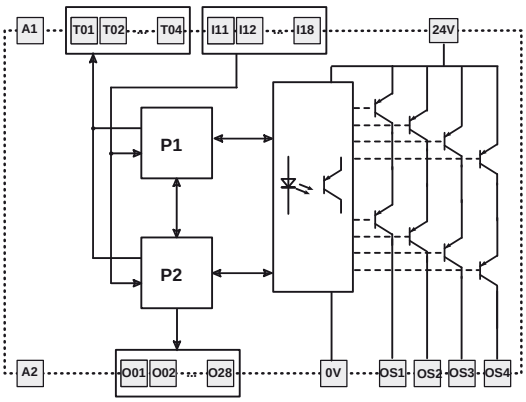

Code structure

CS MP206M0

Connection type	
M	connector with screw terminals
X	connector with spring terminals

Programmable multi function safety module **CS MP207M0**

Main features
- For safety applications up to SIL CL 3/PL e
- Supply voltage: 24 Vdc
- Gemnis Studio for easy and intuitive programming and program simulation
- Wide availability of logical blocks for the management of external devices and programs
- Custom configured versions available on request

Markings and quality marks:

UL approval: E131787
EAC approval: RU C-IT ДМ94.B.01024
TÜV SÜD approval: requested

General technical data

Parameter:	Value:	Page:
SIL CL acc. to EN IEC 62061	up to SIL CL 3	
Performance Level (PL) acc. to EN ISO 13849-1	up to PL e	
Safety category acc. to EN ISO 13849-1	up to cat. 4	
MTTFd	407	
PFHd	5.39E-09	
Response time of the system	< 30 ms	
Dimensions (HxLxW)	111.5x45x99 mm	
Housing data		269 s. 1
Environmental data		269 s. 2
Supply		269 s. 3
In conformity with standards		269 s. 4
Programming software	Gemnis Studio	269 s. 5
USB port	Yes	
Safety inputs (Ix)	4	269 s. 6
4-20 mA type analogue signal inputs (Cx)	2	269 sez. 8
Test outputs (Tx)	4	269 s. 10
Semiconductor signalling output circuits (Ox)	4	270 s. 11
Semiconductor safety output circuits (OSx)	4 PNP	270 s. 12
Weight	250 g	

Terminal layout

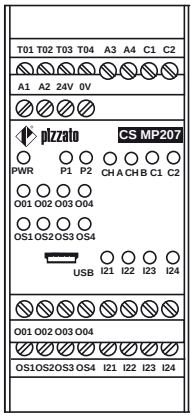

Internal diagram

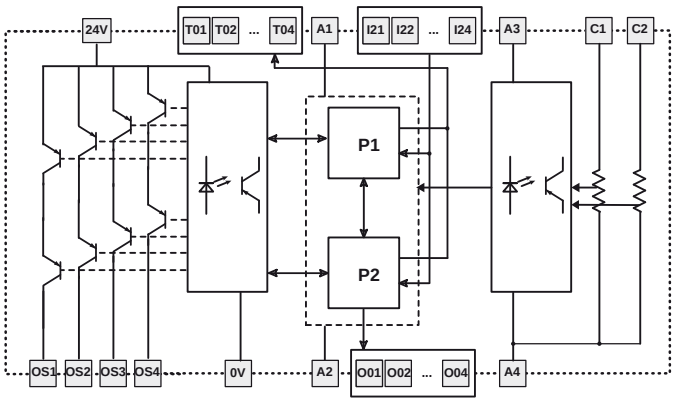

Code structure

CS MP207M0

Connection type	
M	connector with screw terminals
X	connector with spring terminals

Main features

- For safety applications up to SIL CL 3/PL e
- Supply voltage: 24 Vdc
- Gemnis Studio for easy and intuitive programming and program simulation
- Wide availability of logical blocks for the management of external devices and programs
- Custom configured versions available on request

General technical data

Parameter:	Value:	Page:
SIL CL acc. to EN IEC 62061	up to SIL CL 3	
Performance Level (PL) acc. to EN ISO 13849-1	up to PL e	
Safety category acc. to EN ISO 13849-1	up to cat. 4	
MTTFd	588	
PFHd	6.17E-09	
Response time of the system	< 30 ms	
Dimensions (HxLxW)	111.5x45x99 mm	
Housing data		269 s. 1
Environmental data		269 s. 2
Supply		269 s. 3
In conformity with standards		269 s. 4
Programming software	Gemnis Studio	269 s. 5
USB port	Yes	
Safety inputs (Ix)	16	269 s. 6
Test outputs (Tx)	4	269 s. 10
Semiconductor safety output circuits (OSx)	8 PNP	270 s. 13
Weight	250 g	

Markings and quality marks:

UL approval: E131787
EAC approval: RU C-IT ДМ94.В.01024
TÜV SÜD approval: requested

Terminal layout

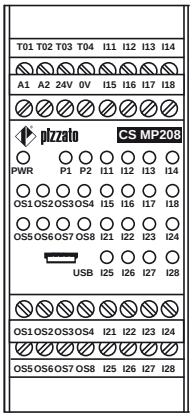

Internal diagram

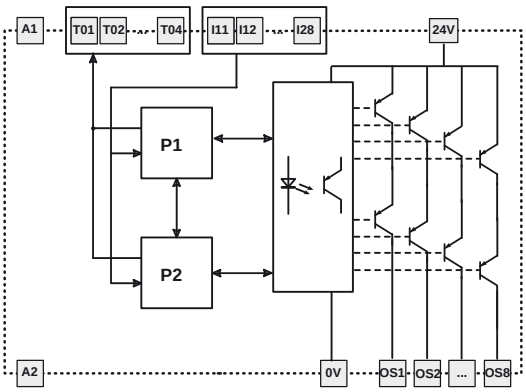

Code structure

CS MP208M0

Connection type	
M	connector with screw terminals
X	connector with spring terminals

Programmable multi function safety module **CS MP301M0**

Main features

- For safety applications up to SIL CL 3/PL e
- Supply voltage: 24 Vdc
- Gemnis Studio for easy and intuitive programming and program simulation
- Wide availability of logical blocks for the management of external devices and programs
- Custom configured versions available on request

General technical data

Parameter:	Value:	Page:
SIL CL acc. to EN IEC 62061	up to SIL CL 3	
Performance Level (PL) acc. to EN ISO 13849-1	up to PL e	
Safety category acc. to EN ISO 13849-1	up to cat. 4	
MTTFd	126	
PFHd	8.92E-10	
Response time of the system	< 30 ms	
Dimensions (HxLxW)	111.5x67.5x99 mm	
Housing data		269 s. 1
Environmental data		269 s. 2
Supply		269 s. 3
In conformity with standards		269 s. 4
Programming software	Gemnis Studio	269 s. 5
USB port	Yes	
Safety inputs (Ix)	24	269 s. 6
Test outputs (Tx)	8	269 s. 10
Semiconductor signalling output circuits (Ox)	4	270 s. 11
Relay safety output circuits	3NO	270 s. 14
Weight	400 gr	

Markings and quality marks:

UL approval: E131787
EAC approval: RU C-IT ДМ94.В.01024
TÜV SÜD approval: requested

Terminal layout

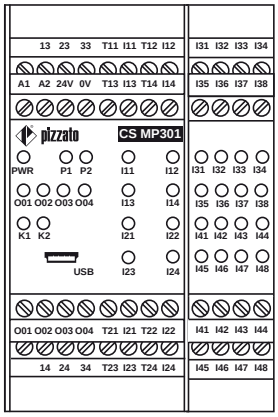

Internal diagram

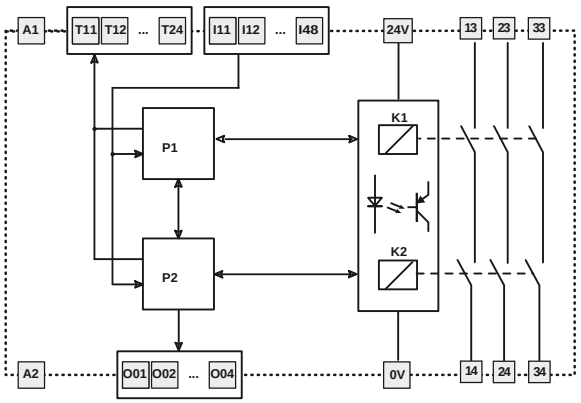

Code structure

CS MP301M0

Connection type	
M	connector with screw terminals
X	connector with spring terminals

Main features

- For safety applications up to SIL CL 3/PL e
- Supply voltage: 24 Vdc
- Gemnis Studio for easy and intuitive programming and program simulation
- Wide availability of logical blocks for the management of external devices and programs
- Custom configured versions available on request

General technical data

Parameter:	Value:	Page:
SIL CL acc. to EN IEC 62061	up to SIL CL 3	
Performance Level (PL) acc. to EN ISO 13849-1	up to PL e	
Safety category acc. to EN ISO 13849-1	up to cat. 4	
MTTFd	604	
PFHd	3.45E-10	
Response time of the system	< 30 ms	
Dimensions (HxLxW)	111.5x67.5x99 mm	
Housing data		269 s. 1
Environmental data		269 s. 2
Supply		269 s. 3
In conformity with standards		269 s. 4
Programming software	Gemnis Studio	269 s. 5
USB port	Yes	
Safety inputs (Ix)	24	269 s. 6
Test outputs (Tx)	12	269 s. 10
Semiconductor signalling output circuits (Ox)	4	270 s. 11
Semiconductor safety output circuits (OSx)	4 PNP	270 s. 12
Weight	350 gr	

Markings and quality marks:

UL approval: E131787
EAC approval: RU C-IT ДМ94.В.01024
TÜV SÜD approval: requested

Terminal layout

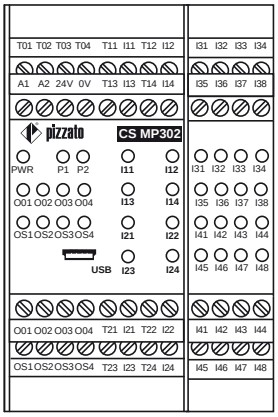

Internal diagram

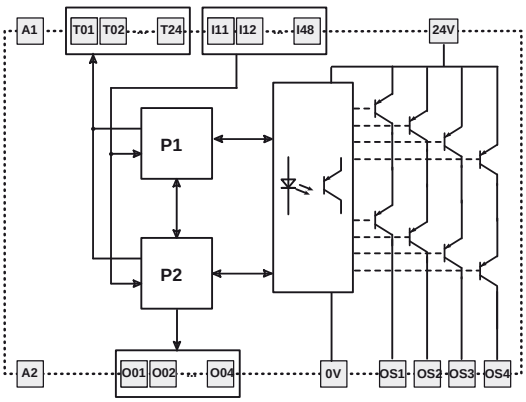

Code structure

CS MP302M0

Connection type	
M	connector with screw terminals
X	connector with spring terminals

Programmable multi function safety module **CS MP303M0**

Main features

- For safety applications up to SIL CL 3/PL e
- Supply voltage: 24 Vdc
- Gemnis Studio for easy and intuitive programming and program simulation
- Wide availability of logical blocks for the management of external devices and programs
- Custom configured versions available on request

General technical data

Parameter:	Value:	Page:
SIL CL acc. to EN IEC 62061	up to SIL CL 3	
Performance Level (PL) acc. to EN ISO 13849-1	up to PL e	
Safety category acc. to EN ISO 13849-1	up to cat. 4	
MTTFd	459	
PFHd	9.11E-10	
Response time of the system	< 30 ms	
Dimensions (HxLxW)	111.5x67.5x99 mm	
Housing data		269 s. 1
Environmental data		269 s. 2
Supply		269 s. 3
In conformity with standards		269 s. 4
Programming software	Gemnis Studio	269 s. 5
USB port	Yes	
Safety inputs (Ix)	32	269 s. 6
Test outputs (Tx)	4	269 s. 10
Semiconductor signalling output circuits (Ox)	4	270 s. 11
Semiconductor safety output circuits (OSx)	4 PNP	270 s. 12
Weight	350 gr	

Markings and quality marks:

UL approval: E131787
EAC approval: RU C-IT ДМ94.В.01024
TÜV SÜD approval: requested

Terminal layout

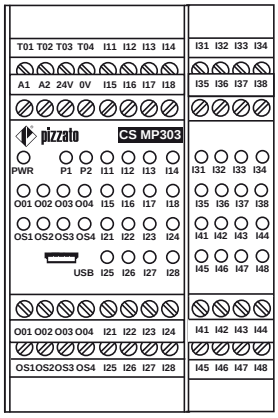

Internal diagram

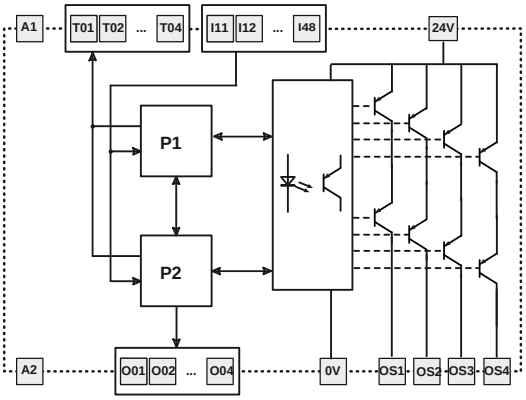

Code structure

CS MP303M0

Connection type	
M	connector with screw terminals
X	connector with spring terminals

Main features

- For safety applications up to SIL CL 3/PL e
- Supply voltage: 24 Vdc
- Gemnis Studio for easy and intuitive programming and program simulation
- Wide availability of logical blocks for the management of external devices and programs
- Custom configured versions available on request

General technical data

Parameter:	Value:	Page:
SIL CL acc. to EN IEC 62061	up to SIL CL 3	
Performance Level (PL) acc. to EN ISO 13849-1	up to PL e	
Safety category acc. to EN ISO 13849-1	up to cat. 4	
MTTFd	97	
PFHd	1.01E-09	
Response time of the system	< 30 ms	
Dimensions (HxLxW)	111.5x67.5x99 mm	
Housing data		269 s. 1
Environmental data		269 s. 2
Supply		269 s. 3
In conformity with standards		269 s. 4
Programming software	Gemnis Studio	269 s. 5
USB port	Yes	
Safety inputs (Ix)	28	269 s. 6
Test outputs (Tx)	4	269 s. 10
Semiconductor signalling output circuits (Ox)	4	270 s. 11
Relay safety output circuits	3NO+1NO	270 s. 14
Weight	400 gr	

Markings and quality marks:

UL approval: E131787
EAC approval: RU C-IT ДМ94.В.01024
TÜV SÜD approval: requested

Terminal layout

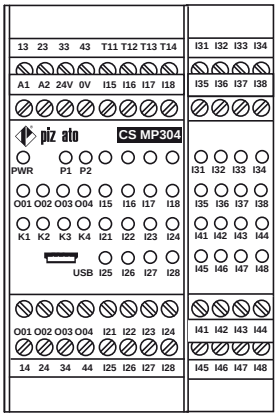

Internal diagram

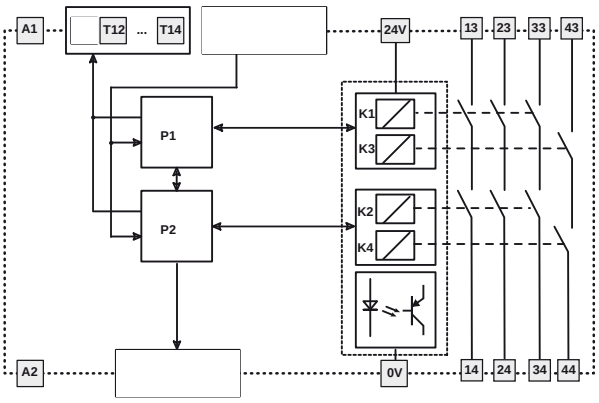

Code structure

CS MP304M0

Connection type	
M	connector with screw terminals
X	connector with spring terminals

Programmable multi function safety module **CS MP305M0**

Main features

- For safety applications up to SIL CL 3/PL e
- Supply voltage: 24 Vdc
- Gemnis Studio for easy and intuitive programming and program simulation
- Wide availability of logical blocks for the management of external devices and programs
- Custom configured versions available on request

General technical data

Parameter:	Value:	Page:
SIL CL acc. to EN IEC 62061	up to SIL CL 3	
Performance Level (PL) acc. to EN ISO 13849-1	up to PL e	
Safety category acc. to EN ISO 13849-1	up to cat. 4	
MTTFd	503	
PFHd	7.24E-10	
Response time of the system	< 30 ms	
Dimensions (HxLxW)	111.5x67.5x99 mm	
Housing data		269 s. 1
Environmental data		269 s. 2
Supply		269 s. 3
In conformity with standards		269 s. 4
Programming software	Gemnis Studio	269 s. 5
USB port	Yes	
Safety inputs (Ix)	24	269 s. 6
Test outputs (Tx)	4	269 s. 10
Semiconductor signalling output circuits (Ox)	12	270 s. 11
Semiconductor safety output circuits (OSx)	4 PNP	270 s. 12
Weight	350 gr	

Markings and quality marks:

UL approval: E131787
EAC approval: RU C-IT ДМ94.В.01024
TÜV SÜD approval: requested

Terminal layout

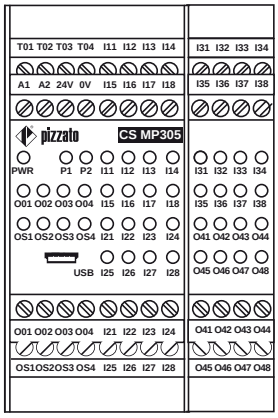

Internal diagram

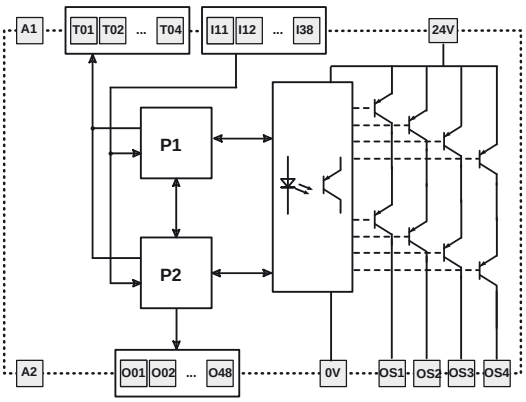

Code structure

CS MP305M0

Connection type	
M	connector with screw terminals
X	connector with spring terminals

Main features

- For safety applications up to SIL CL 3/PL e
- Supply voltage: 24 Vdc
- Gemnis Studio for easy and intuitive programming and program simulation
- Wide availability of logical blocks for the management of external devices and programs
- Custom configured versions available on request

General technical data

Parameter:	Value:	Page:
SIL CL acc. to EN IEC 62061	up to SIL CL 3	
Performance Level (PL) acc. to EN ISO 13849-1	up to PL e	
Safety category acc. to EN ISO 13849-1	up to cat. 4	
MTTFd	99	
PFHd	8.25E-10	
Response time of the system	< 30 ms	
Dimensions (HxLxW)	111.5x67.5x99 mm	
Housing data		269 s. 1
Environmental data		269 s. 2
Supply		269 s. 3
In conformity with standards		269 s. 4
Programming software	Gemnis Studio	269 s. 5
USB port	Yes	
Safety inputs (Ix)	20	269 s. 6
Test outputs (Tx)	4	269 s. 10
Semiconductor signalling output circuits (Ox)	12	270 s. 11
Relay safety output circuits	3NO+1NO	270 s. 14
Weight	400 gr	

Markings and quality marks:

UL approval: E131787
EAC approval: RU C-IT ДМ94.В.01024
TÜV SÜD approval: requested

Terminal layout

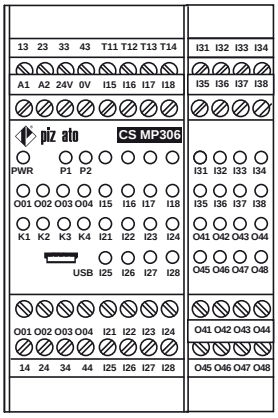

Internal diagram

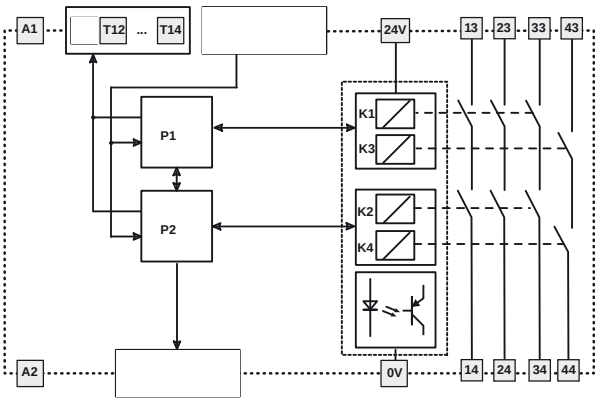

Code structure

CS MP306M0

Connection type	
M	connector with screw terminals
X	connector with spring terminals

Programmable multi function safety module **CS MP307M0**

Main features

- For safety applications up to SIL CL 3/PL e
- Supply voltage: 24 Vdc
- Gemnis Studio for easy and intuitive programming and program simulation
- Wide availability of logical blocks for the management of external devices and programs
- Custom configured versions available on request

Markings and quality marks:

UL approval: E131787
EAC approval: RU C-IT ДМ94.В.01024
TÜV SÜD approval: requested

General technical data

Parameter:	Value:	Page:
SIL CL acc. to EN IEC 62061	up to SIL CL 3	
Performance Level (PL) acc. to EN ISO 13849-1	up to PL e	
Safety category acc. to EN ISO 13849-1	up to cat. 4	
MTTFd	276	
PFHd	5.84E-09	
Response time of the system	< 30 ms	
Dimensions (HxLxW)	111.5x67.5x99 mm	
Housing data		269 s. 1
Environmental data		269 s. 2
Supply		269 s. 3
In conformity with standards		269 s. 4
Programming software	Gemnis Studio	269 s. 5
USB port	Yes	
Safety inputs (Ix)	8	269 s. 6
Decoupled digital inputs (Jx)	4	269 sez. 7
4-20 mA type analogue signal inputs (Cx)	2	269 sez. 8
Inputs for frequency signals from 0 to 4 kHz (Fx)	4	269 sez. 9
Test outputs (Tx)	4	269 s. 10
Semiconductor signalling output circuits (Ox)	4	270 s. 11
Semiconductor safety output circuits (OSx)	4 PNP	270 s. 12
Weight	350 gr	

Terminal layout

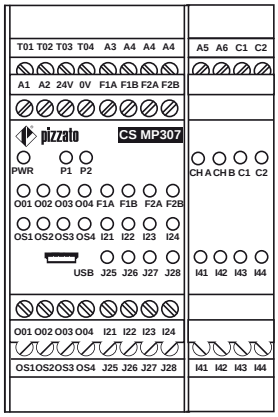

Internal diagram

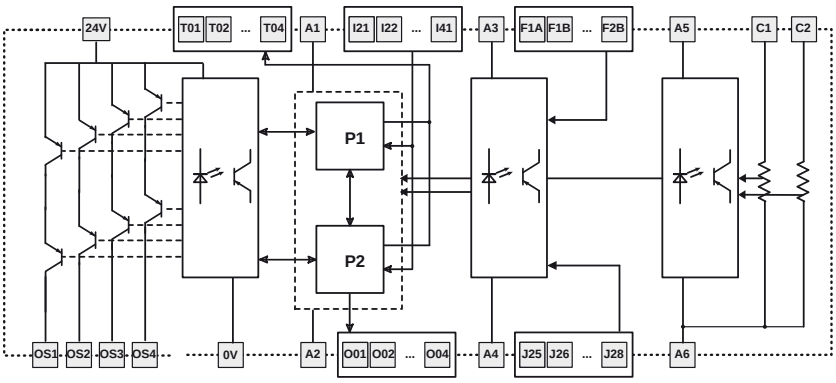

Code structure

CS MP307M0

Connection type	
M	connector with screw terminals
X	connector with spring terminals

Main features

- For safety applications up to SIL CL 3/PL e
- Supply voltage: 24 Vdc
- Gemnis Studio for easy and intuitive programming and program simulation
- Wide availability of logical blocks for the management of external devices and programs
- Custom configured versions available on request

General technical data

Parameter:	Value:	Page:
SIL CL acc. to EN IEC 62061	up to SIL CL 3	
Performance Level (PL) acc. to EN ISO 13849-1	up to PL e	
Safety category acc. to EN ISO 13849-1	up to cat. 4	
MTTFd	514	
PFHd	6.42E-09	
Response time of the system	< 30 ms	
Dimensions (HxLxW)	111.5x67.5x99 mm	
Housing data		269 s. 1
Environmental data		269 s. 2
Supply		269 s. 3
In conformity with standards		269 s. 4
Programming software	Gemnis Studio	269 s. 5
USB port	Yes	
Safety inputs (Ix)	24	269 s. 6
Test outputs (Tx)	4	269 s. 10
Semiconductor signalling output circuits (Ox)	8	270 s. 11
Semiconductor safety output circuits (OSx)	8 PNP	270 s. 13
Weight	350 gr	

Markings and quality marks:

UL approval: E131787
EAC approval: RU C-IT ДМ94.В.01024
TÜV SÜD approval: requested

Terminal layout

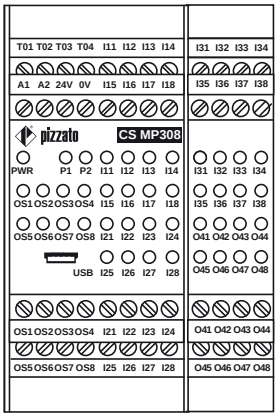

Internal diagram

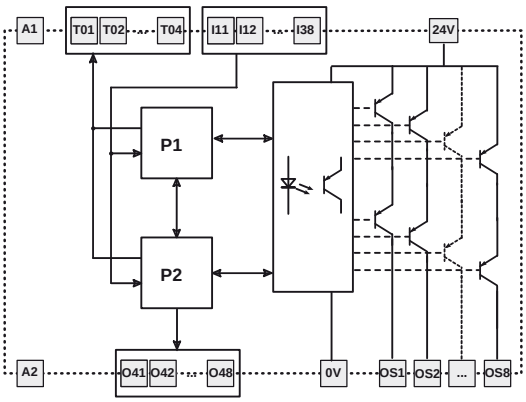

Code structure

CS MP308M0

Connection type	
M	connector with screw terminals
X	connector with spring terminals

Programmable multi function safety module **CS MP309M0**

Main features

- For safety applications up to SIL CL 3/PL e
- Supply voltage: 24 Vdc
- Gemnis Studio for easy and intuitive programming and program simulation
- Wide availability of logical blocks for the management of external devices and programs
- Custom configured versions available on request

General technical data

Parameter:	Value:	Page:
SIL CL acc. to EN IEC 62061	up to SIL CL 3	
Performance Level (PL) acc. to EN ISO 13849-1	up to PL e	
Safety category acc. to EN ISO 13849-1	up to cat. 4	
MTTFd	469	
PFHd	6.61E-09	
Response time of the system	< 30 ms	
Dimensions (HxLxW)	111.5x67.5x99 mm	
Housing data		269 s. 1
Environmental data		269 s. 2
Supply		269 s. 3
In conformity with standards		269 s. 4
Programming software	Gemnis Studio	269 s. 5
USB port	Yes	
Safety inputs (Ix)	32	269 s. 6
Test outputs (Tx)	4	269 s. 10
Semiconductor safety output circuits (OSx)	8 PNP	270 s. 13
Weight	350 gr	

Markings and quality marks:

UL approval: E131787
EAC approval: RU C-IT ДМ94.В.01024
TÜV SÜD approval: requested

Terminal layout

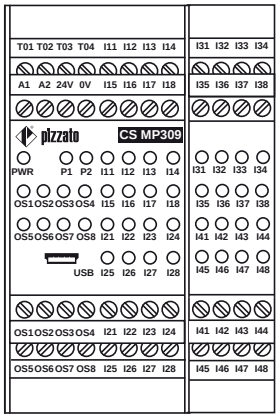

Internal diagram

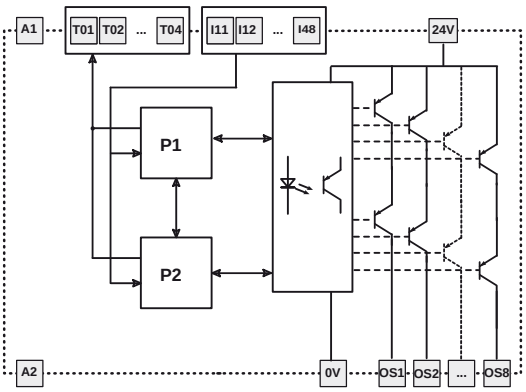

Code structure

CS MP309M0

Connection type	
M	connector with screw terminals
X	connector with spring terminals

Main features

- For safety applications up to SIL CL 3/PL e
- Supply voltage: 24 Vdc
- Gemnis Studio for easy and intuitive programming and program simulation
- Wide availability of logical blocks for the management of external devices and programs
- Custom configured versions available on request

General technical data

Parameter:	Value:	Page:
SIL CL acc. to EN IEC 62061	up to SIL CL 3	
Performance Level (PL) acc. to EN ISO 13849-1	up to PL e	
Safety category acc. to EN ISO 13849-1	up to cat. 4	
MTTFd	413	
PFHd	1.16E-09	
Response time of the system	< 30 ms	
Dimensions (HxLxW)	111.5x90x99 mm	
Housing data		269 s. 1
Environmental data		269 s. 2
Supply		269 s. 3
In conformity with standards		269 s. 4
Programming software	Gemnis Studio	269 s. 5
USB port	Yes	
Safety inputs (Ix)	40	269 s. 6
Test outputs (Tx)	4	269 s. 10
Semiconductor signalling output circuits (Ox)	12	270 s. 11
Semiconductor safety output circuits (OSx)	4 PNP	270 s. 12
Weight	500 gr	

Markings and quality marks:

UL approval: E131787
EAC approval: RU C-IT ДМ94.В.01024
TÜV SÜD approval: requested

Terminal layout

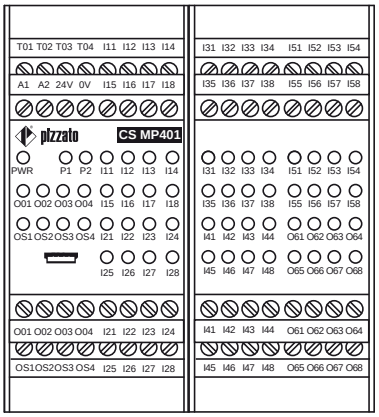

Internal diagram

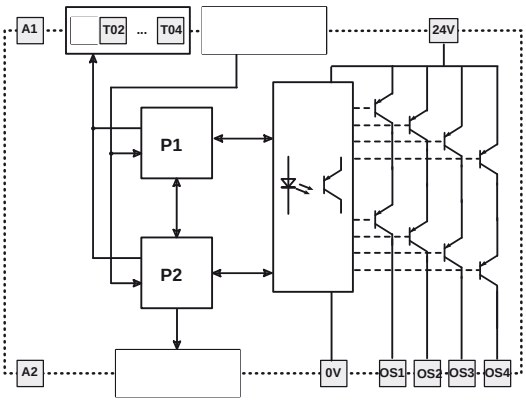

Code structure

CS MP401M0

Connection type	
M	connector with screw terminals
X	connector with spring terminals

Programmable multi function safety module **CS MP402M0**

Main features
- For safety applications up to SIL CL 3/PL e
- Supply voltage: 24 Vdc
- Gemnis Studio for easy and intuitive programming and program simulation
- Wide availability of logical blocks for the management of external devices and programs
- Custom configured versions available on request

General technical data

Parameter:	Value:	Page:
SIL CL acc. to EN IEC 62061	up to SIL CL 3	
Performance Level (PL) acc. to EN ISO 13849-1	up to PL e	
Safety category acc. to EN ISO 13849-1	up to cat. 4	
MTTFd	452	
PFHd	6.67E-09	
Response time of the system	< 30 ms	
Dimensions (HxLxW)	111.5x90x99 mm	
Housing data		269 s. 1
Environmental data		269 s. 2
Supply		269 s. 3
In conformity with standards		269 s. 4
Programming software	Gemnis Studio	269 s. 5
USB port	Yes	
Safety inputs (Ix)	32	269 s. 6
Test outputs (Tx)	12	269 s. 10
Semiconductor signalling output circuits (Ox)	8	270 s. 11
Semiconductor safety output circuits (OSx)	8 PNP	270 s. 13
Weight	500 gr	

Markings and quality marks:

UL approval: E131787
EAC approval: RU C-IT ДМ94.В.01024
TÜV SÜD approval: requested

Terminal layout

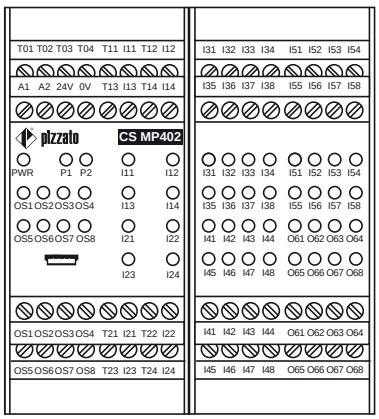

Internal diagram

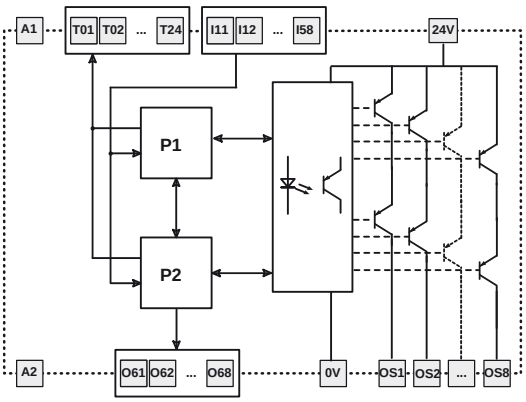

Code structure

CS MP402M0

Connection type	
M	connector with screw terminals
X	connector with spring terminals

Main features

- For safety applications up to SIL CL 3/PL e
- Supply voltage: 24 Vdc
- Gemnis Studio for easy and intuitive programming and program simulation
- Wide availability of logical blocks for the management of external devices and programs
- Custom configured versions available on request

General technical data

Parameter:	Value:	Page:
SIL CL acc. to EN IEC 62061	up to SIL CL 3	
Performance Level (PL) acc. to EN ISO 13849-1	up to PL e	
Safety category acc. to EN ISO 13849-1	up to cat. 4	
MTTFd	416	
PFHd	6.86E-09	
Response time of the system	< 30 ms	
Dimensions (HxLxW)	111.5x90x99 mm	
Housing data		269 s. 1
Environmental data		269 s. 2
Supply		269 s. 3
In conformity with standards		269 s. 4
Programming software	Gemnis Studio	269 s. 5
USB port	Yes	
Safety inputs (Ix)	40	269 s. 6
Test outputs (Tx)	4	269 s. 10
Semiconductor signalling output circuits (Ox)	8	270 s. 11
Semiconductor safety output circuits (OSx)	8 PNP	270 s. 13
Weight	500 gr	

Markings and quality marks:

UL approval: E131787
EAC approval: RU C-IT ДМ94.В.01024
TÜV SÜD approval: requested

Terminal layout

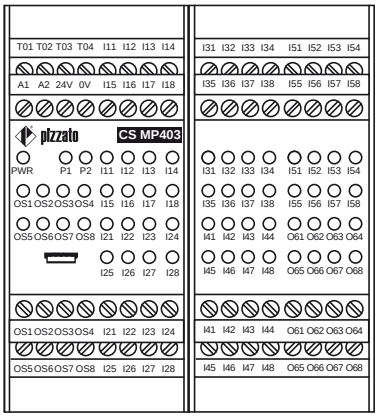

Internal diagram

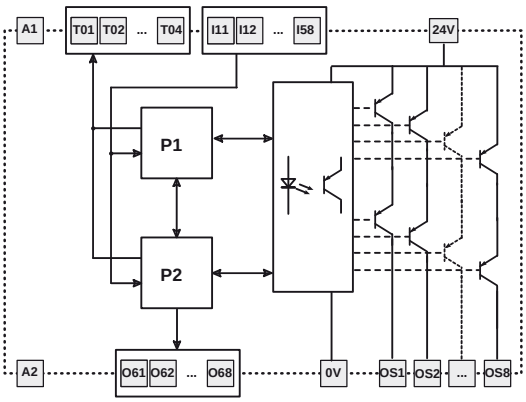

Code structure

CS MP403M0

Connection type	
M	connector with screw terminals
X	connector with spring terminals

Technical data

1) Housing

Housing:	polyamide PA 6.6, self-extinguishing V0 according to UL 94
Protection degree:	IP40 (housing) IP20 (terminal strip)
Dimensions, cable cross sections, terminal tightening torque:	pages 284-285 design C/E

2) Environmental

Operating temperature:	0°C ... +55°C
Storage temperature:	-20°C ... +70°C
Pollution degree:	external 3, internal 2
Overvoltage category:	II

3) Power supply

Rated voltage A1-A2 (Un):	24 Vdc
DC maximum residual ripple:	10%
Supply voltage tolerance:	±15% of Un
Rated consumption (w/o load):	< 3 W
Protection against short circuits:	resistance PTC, Ih=0.5 A
PTC triggering time:	Intervention > 100 ms, reset > 3 s
Internal protection against short circuits on outputs (Tx, Ox):	Electronic
Maximum current generation ability of module as a sum of the Tx and Ox type outputs:	0.5 A
Self-test time on startup:	< 2 s

4) In conformity with standards

EN 60947-1, EN 60947-5-1, EN 60204-1, EN ISO 13849-1, EN ISO 13855, EN 1037, EN ISO 12100, EN ISO 13850, EN 60529, EN 61000-6-2, EN 61000-6-3, EN 62326-1, EN 61326-1, EN 61326-3-1, EN 60664-1, EN 62061, EN 61131-6, UL 508, CSA C22.2 n°14-95.

In conformity with the requirements of:
Low Voltage Directive 2006/95/EC,
Machinery Directive 2006/42/EC,
EMC Directive 2004/108/EC

Characteristics approved by UL

Rated supply voltage: 24 Vdc
DC consumption: < 3 W

Relay output:
- maximum switching voltage: 230/240 Vac,
- maximum current: 4 A
- utilization category: C300 pilot duty

Semiconductor output:
- maximum switching voltage: 24 V dc
- maximum current: 500 mA

Notes:
- Use 60° or 75 °C copper (Cu) conductor, rigid or flexible, wire size AWG 30-12.
- Terminal tightening torque of 5-7 Lb In.
- Only for 24 Vac/dc version, supply from remote class 2 source or limited voltage and limited energy. (Supply from Remote Class 2 Source or limited voltage limited energy).

5) Gemnis Studio

The **Gemnis Studio** software is the graphic development environment for the creation, simulation and debugging of programs suitable to be included in the modules belonging to the Gemnis line.
This software is licensed to users wishing to program these modules, subject to prior registration at **www.gemnis.com**.
You can download the latest **Gemnis Studio** software version from the site, which will allow you to program Gemnis line safety modules.

Gemnis Studio software minimum download requirements

Computer and processor:	x86 with clock frequency of 1 GHz
Memory:	512 MB
Hard disk:	200 MB
Screen:	Monitor with resolution of 1024 × 768 or higher.
Operating system:	Microsoft Windows XP+SP3, Microsoft Seven or Microsoft Windows 8.1 Microsoft Framework .NET 3.5 or higher Microsoft Report Viewer

6) Input circuits (Ix)

Input circuits voltage and current:	24 V, 5 mA
Input signals:	0-8 V (Off), 12-24 V (On)
Galvanic separation:	No
Minimum duration of input signal:	10 ms
Input signal filtering:	Yes, maximum interference period 0.4 ms
Maximum input resistance:	100 Ohm
Maximum input capacitance:	470 nF to ground 470 nF between the two conductors

7) Decoupled input circuits (Jx)

Input circuits voltage and current:	24 V, 5 mA
Input signals:	0-8 V (Off), 12-24 V (On)
Galvanic separation:	Yes
Insulation voltage (Ui):	500 V
Minimum duration of input signal:	10 ms
Input signal filtering:	Yes, maximum interference period 0.4 ms
Maximum input resistance:	100 Ohm
Maximum input capacitance:	470 nF to ground 470 nF between the two conductors

NB: Voltage and current values indicated refer to the power supply terminals (Ax, see each module individually) of the board housing the Jx type terminals

8) Analogue input circuits (Cx)

Rated supply voltage:	24 Vdc ± 15 %
Analogue input type:	4-20 mA current loop
Measurement range:	0 … 25 mA
Accuracy over entire measurement range:	1 % ± 1 digit
Resolution:	0.01 mA
Input resistance:	100 Ohm
Maximum applicable current:	30 mA
Managed sensors:	"source" type with 2/3 wires
Galvanic separation:	Yes
Insulation voltage (Ui):	500 V

NB: Voltage and current values indicated refer to the power supply terminals (Ax, see each module individually) of the board housing the Cx type terminals

9) Frequency input circuits (Fx)

Rated supply voltage:	24 Vdc ± 15 %
Input circuit voltage and current:	24 Vdc, 7 mA
Supply voltage check of proximity sensors on power supply:	24 Vdc ± 20 %
Maximum detectable frequency:	4 kHz
Minimum detectable frequency:	1 Hz
Frequency detection accuracy:	1 % ± 1 digit
Resolution:	0.1 Hz
Minimum detection time closed tree:	1 s
Galvanic separation:	Yes
Insulation voltage (Ui):	500 V

NB: Voltage and current values indicated refer to the power supply terminals (Ax, see each module individually) of the board housing the Fx type terminals

10) Circuits with Test signals (Tx)

Signal type:	Pulsed 100 Hz 24V/0V, duty cycle 50%
Max. total current:	See Supply
Protected against short circuit:	Yes

11) Semiconductor signalling output circuits (Ox)

Output type:	PNP
Maximum current per output:	0.5 A
Max. total current:	see Supply
Impulse voltage (Uimp):	0.8 kV
Rated insulation voltage (Ui):	32 V
Protected against short circuit:	Yes
Galvanic separation:	No

12) Semiconductor safety output circuits (OSx) with 4 safety outputs

Rated voltage 24V-0V:	24 Vdc
Number of outputs:	4
Output type:	PNP
Maximum current per output:	0.5 A
Max. total output current:	2 A
Minimum current:	10 mA
Maximum capacitive load to ground per output:	400 nF
Maximum inductive load per output:	500 mH
Protection fuse:	2 A type gG
Galvanic separation:	Yes
Impulse voltage (Uimp):	0.8 kV
Rated insulation voltage (Ui):	32 V
Short circuit detection between outputs:	Yes
Deactivation pulse duration on safety outputs:	< 300 µs

13) Semiconductor safety output circuits (OSx) with 8 safety outputs

Rated voltage 24V-0V:	24 Vdc
Number of outputs:	8
Output type:	PNP
Maximum current per output:	0.4 A
Max. total output current:	3 A
Minimum current:	10 mA
Maximum capacitive load to ground per output:	400 nF
Maximum inductive load per output:	500 mH
Protection fuse:	4 A type gG
Galvanic separation:	Yes
Impulse voltage (Uimp):	0.8 kV
Rated insulation voltage (Ui):	32 V
Short circuit detection between outputs:	Yes
Deactivation pulse duration on safety outputs:	< 300 µs

14) Relay safety output circuits

Rated voltage 24V-0V:	24 Vdc
Contact type:	Guided contacts according to EN 50205
Contact material:	gold-plated silver alloy
Maximum switching voltage:	230 Vac; 300 Vdc
Maximum current per contact:	6 A
Max. total current Σ Ith^2:	36 A^2
Minimum current:	10 mA
Protection fuse:	4 A type gG
Max. load:	1380 VA/W
Impulse voltage (Uimp):	4 kV
Rated insulation voltage (Ui):	500 V
Utilization category (EN 60947-5-1):	AC15 (Ue=230V, Ie=3A); DC13 (Ue=24V, Ie=4A (6 op. cycles/minute)
Utilization category (UL 508):	C300
Contact resistance:	< 100 mOhm
Mechanical endurance:	>10 million operating cycles
Electrical endurance:	>100,000 operating cycles
Galvanic separation:	Yes

The number and the load capacity of output contacts can be increased by using expansion modules or contactors.
See pages 231 - 240.

Multifunctional pre-programmed module **CS MF**

Introduction

GEMNIS

An increasing number of users requires products which carry out several safety functions without needing the complex management of a safety PLC or the complex wiring of many traditional safety modules. Such problems arise mainly when the safety functions are typically greater than 3 or 4, and/or when managing a safety PLC software (software purchase, training courses, programming of all modules, software management and filing, updates etc.) turns out to be too great an overhead in relation to problem complexity.
Pizzato Elettrica introduces Gemnis, a series of electronic modules which are pre-programmed for specific customer applications or for generic safety macro-functions commonly used in industrial contexts. The following pages list some of the pre-programmed products for generic macro-functions commonly used in the industrial sector. These products are also available for individual purchase. Any customer requiring a product pre-programmed to their particular specification can contact the Pizzato Elettrica technical department (minimum volumes are requested).
The resulting advantages for customers typically include simplified product management (purchase of finished components) and reduced general costs (no software to be installed and managed, products are immediately operational).
All the Gemnis series products are able to provide circuit solutions at SIL 3 (EN 62061), PL e (EN ISO 13849-1) or category 4 (EN ISO 13849-1) levels.

Markings and quality marks:

CE c UL us EAC

UL approval: E131787
EAC approval: RU C-IT ДМ94.В.01024

Code structure

CS MF201M0-P••

Hardware code	
•••	hardware code

Program code	
P••	program code

Connection type	
M	connector with screw terminals

Supply voltage	
0	24 Vdc -15% ... +15%

Product list

Product code	Functions executed	Safety outputs	Signalling outputs	Page
CS MF201M0-P1	Monitoring of 2 guards in AND and 1 emergency stop with automatic start or manual monitored start.	3 NO	4 PNP	273
CS MF202M0-P2	Monitoring of 4 guards in AND, 1 bypass selector, 1 emergency stop, automatic start or manual monitored start, general enabling signal.	4 PNP	4 PNP	274
CS MF202M0-P3	Monitoring of 6 guards in AND (2NC contacts), 1 emergency stop with automatic start or manual monitored start.	4 PNP	4 PNP	275
CS MF202M0-P4	Monitoring of 6 guards in AND (1NC+1NO contacts), 1 emergency stop with automatic start or manual monitored start.	4 PNP	4 PNP	276
CS MF202M0-P5	Monitoring of 4 guards with independent outputs, 1 bypass selector, 1 emergency stop, automatic start or manual monitored start, general enabling signal.	4 PNP	4 PNP	277
CS MF202M0-P6	Monitoring of 2 guards, 1 bypass selector, 1 emergency stop, automatic start or manual monitored start, general enabling signal. Three instantaneous outputs and one timed output with a 4 way time selector. Selectable On/Off delay.	4 PNP	4 PNP	278
CS MF202M0-P7	Monitoring of 4 guards in AND with door lock equipped switches, "D" principle, 1 emergency stop, monitored start. Two instantaneous outputs and two timed outputs via 4 way time selector.	4 PNP	4 PNP	279
CS MF202M0-P8	Monitoring of 4 guards in AND with door lock equipped switches, "E" principle, 1 emergency stop, monitored start. Two instantaneous outputs and two timed outputs via 4 way time selector.	4 PNP	4 PNP	280

Legend

- Movable guard monitoring
- Movable guard with lock monitoring
- Emergency stop
- Start function
- Bypass selector
- Time selector
- Enabling input

Pre-programmed module **CS MF201M0-P1**

Product code
CS MF201M0-P1

Main functions
- Monitoring of 2 guards
- 1 emergency stop monitoring
- Automatic start or monitored manual start

Outputs
- 3 NO safety outputs
- 4 PNP signalling outputs

Technical data: see CS MP201M0
Dimensions, cable cross sections, terminal tightening torque: page 284, design C
Internal wiring diagram: page 286
Terminal layout: page 286

Application program: P1

The application program stored in the module executes one or more safety functions, as shown in the following block diagram:

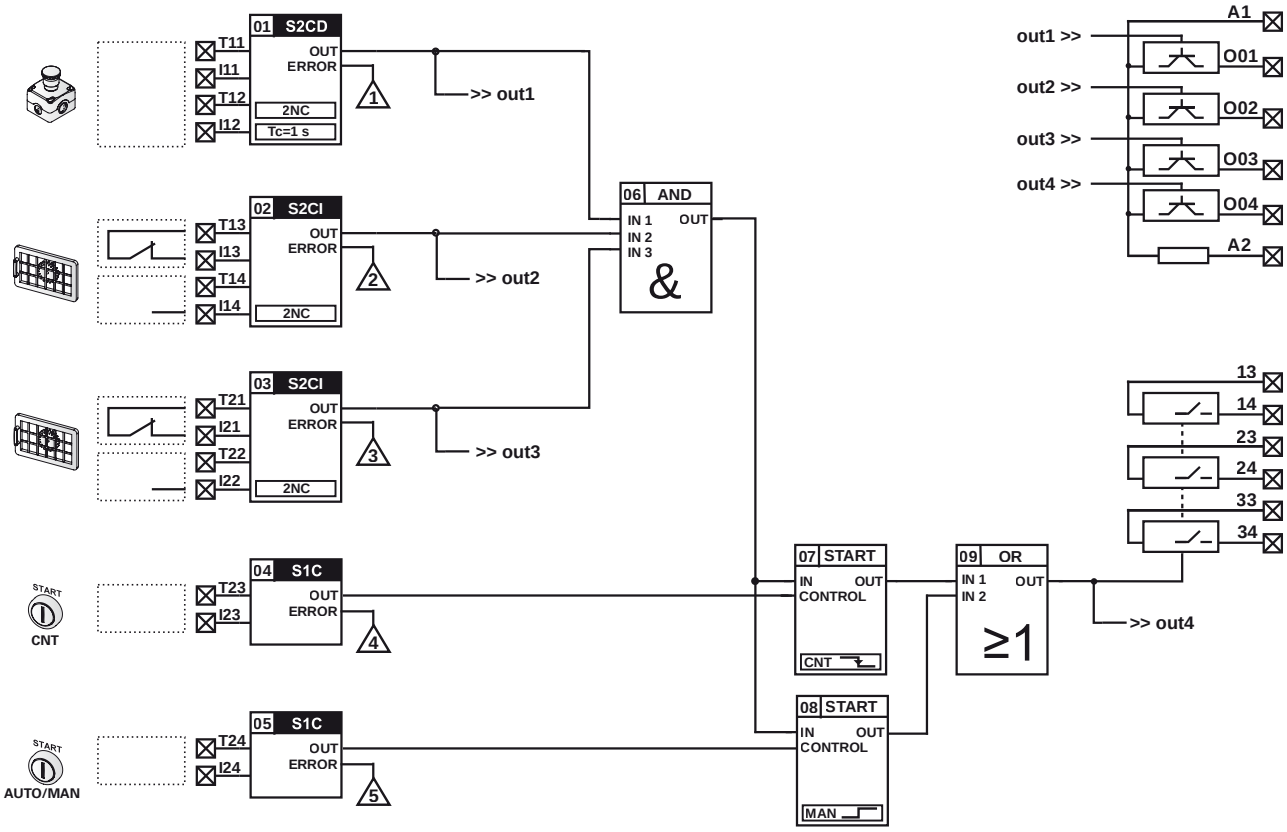

Pre-programmed module **CS MF202M0-P2**

Product code
CS MF202M0-P2

Main functions
- Monitoring of 4 guards
- 1 bypass selector
- 1 emergency stop
- Automatic start or monitored manual start
- General enabling signal

Outputs
- 4 PNP safety outputs
- 4 PNP signalling outputs

Technical data: see CS MP202M0
Dimensions, cable cross sections, terminal tightening torque: page 284, design C
Internal wiring diagram: page 286
Terminal layout: page 286

Application program: P2

The application program stored in the module executes one or more safety functions, as shown in the following block diagram:

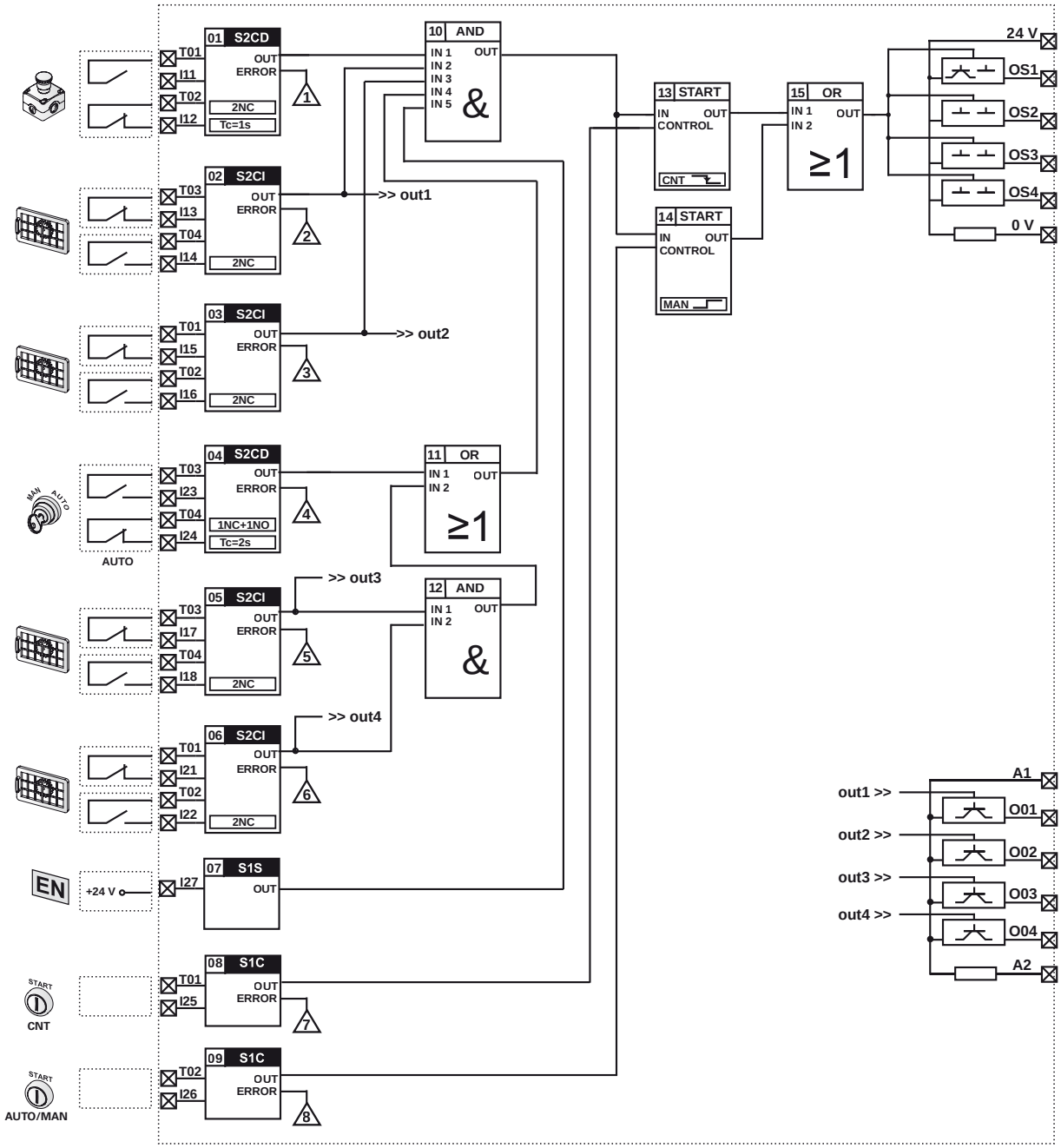

Pre-programmed module **CS MF202M0-P3**

Product code
CS MF202M0-P3

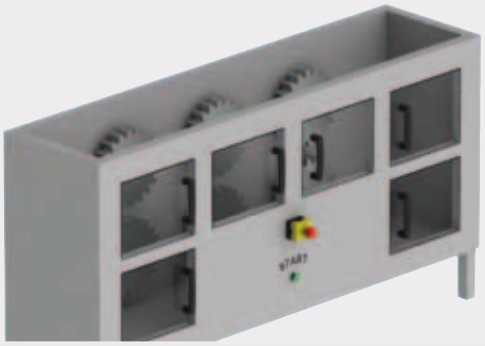

Main functions
- Monitoring of 6 guards (2NC contacts)
- 1 emergency stop
- Automatic start or monitored manual start

Outputs
- 4 PNP safety outputs
- 4 PNP signalling outputs

Technical data: see CS MP202M0
Dimensions, cable cross sections, terminal tightening torque: page 284, design C
Internal wiring diagram: page 286
Terminal layout: page 286

Application program: P3

The application program stored in the module executes one or more safety functions, as shown in the following block diagram:

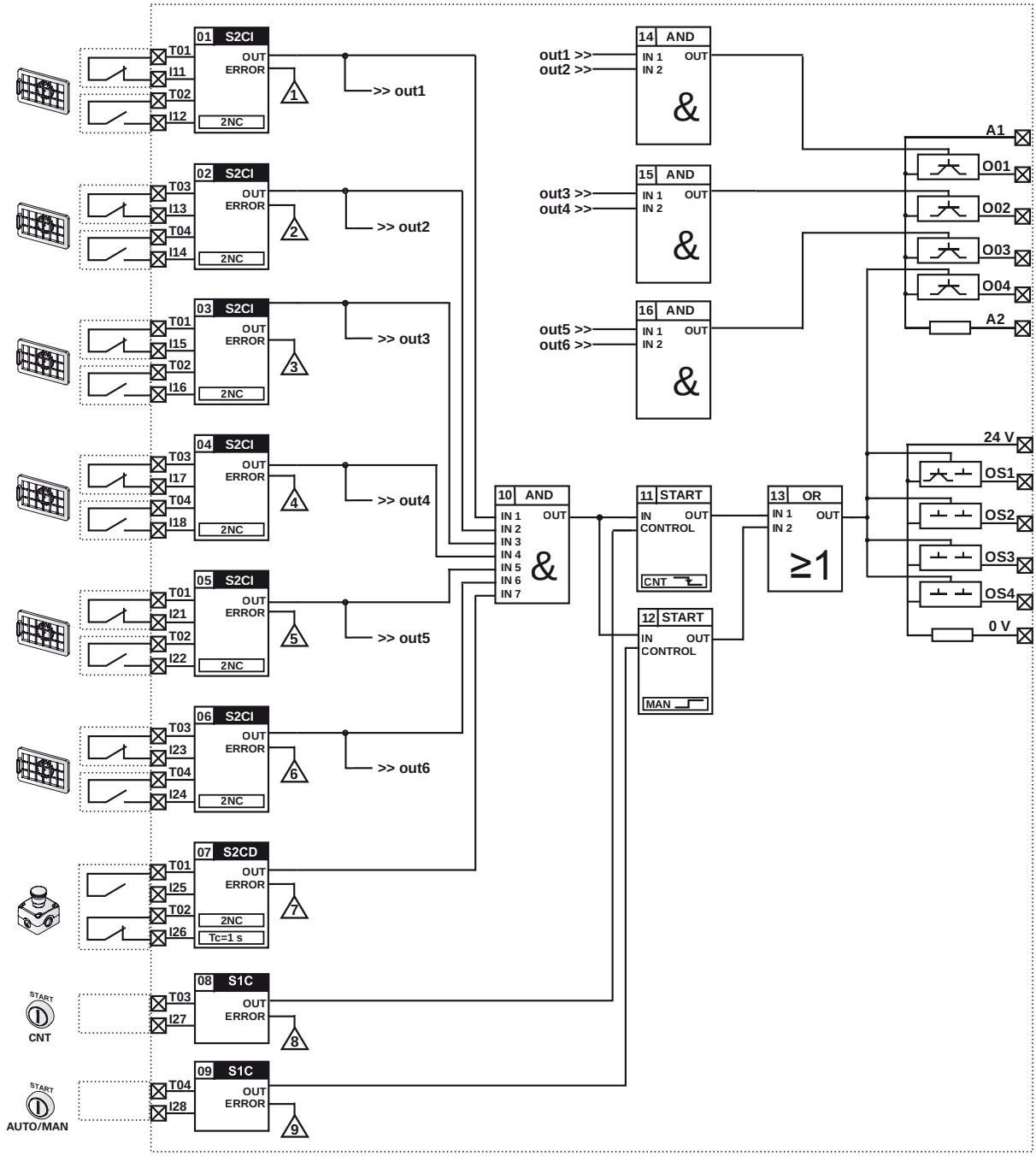

Pre-programmed module **CS MF202M0-P4**

Product code
CS MF202M0-P4

Main functions
- Monitoring of 6 guards (1NC+1NO contacts)
- 1 emergency stop
- Automatic start or monitored manual start

Outputs
- 4 PNP safety outputs
- 4 PNP signalling outputs

Technical data: see CS MP202M0
Dimensions, cable cross sections, terminal tightening torque: page 284, design C
Internal wiring diagram: page 286
Terminal layout: page 286

Application program: P4

The application program stored in the module executes one or more safety functions, as shown in the following block diagram:

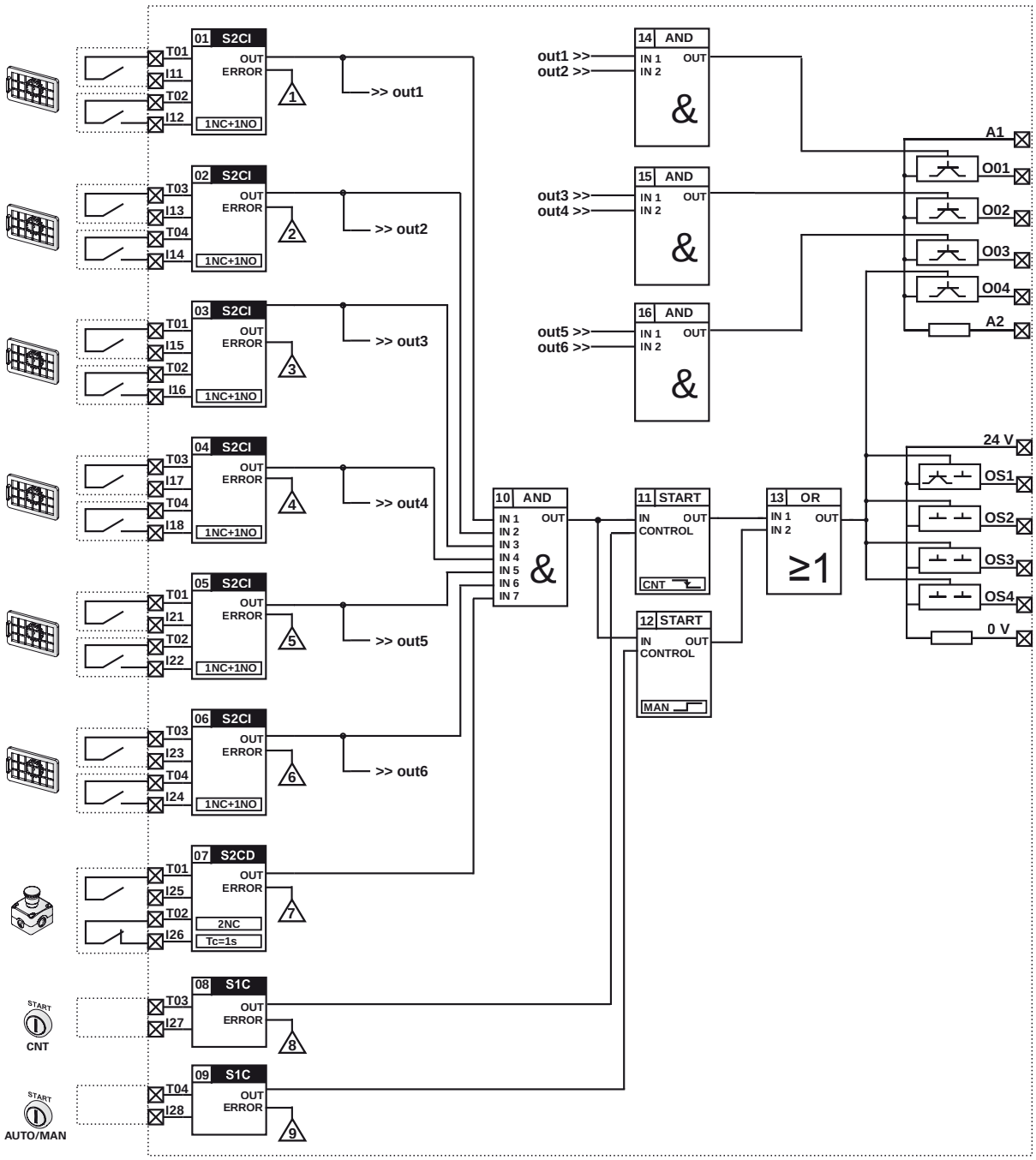

Pre-programmed module **CS MF202M0-P5**

Product code
CS MF202M0-P5

Main functions
- Monitoring of 4 guards with independent outputs
- 1 bypass selector
- 1 emergency stop
- Automatic start or monitored manual start
- General enabling signal

Outputs
- 4 PNP safety outputs
- 4 PNP signalling outputs

Technical data: see CS MP202M0
Dimensions, cable cross sections, terminal tightening torque: page 284, design C
Internal wiring diagram: page 286
Terminal layout: page 286

Application program: P5

The application program stored in the module executes one or more safety functions, as shown in the following block diagram:

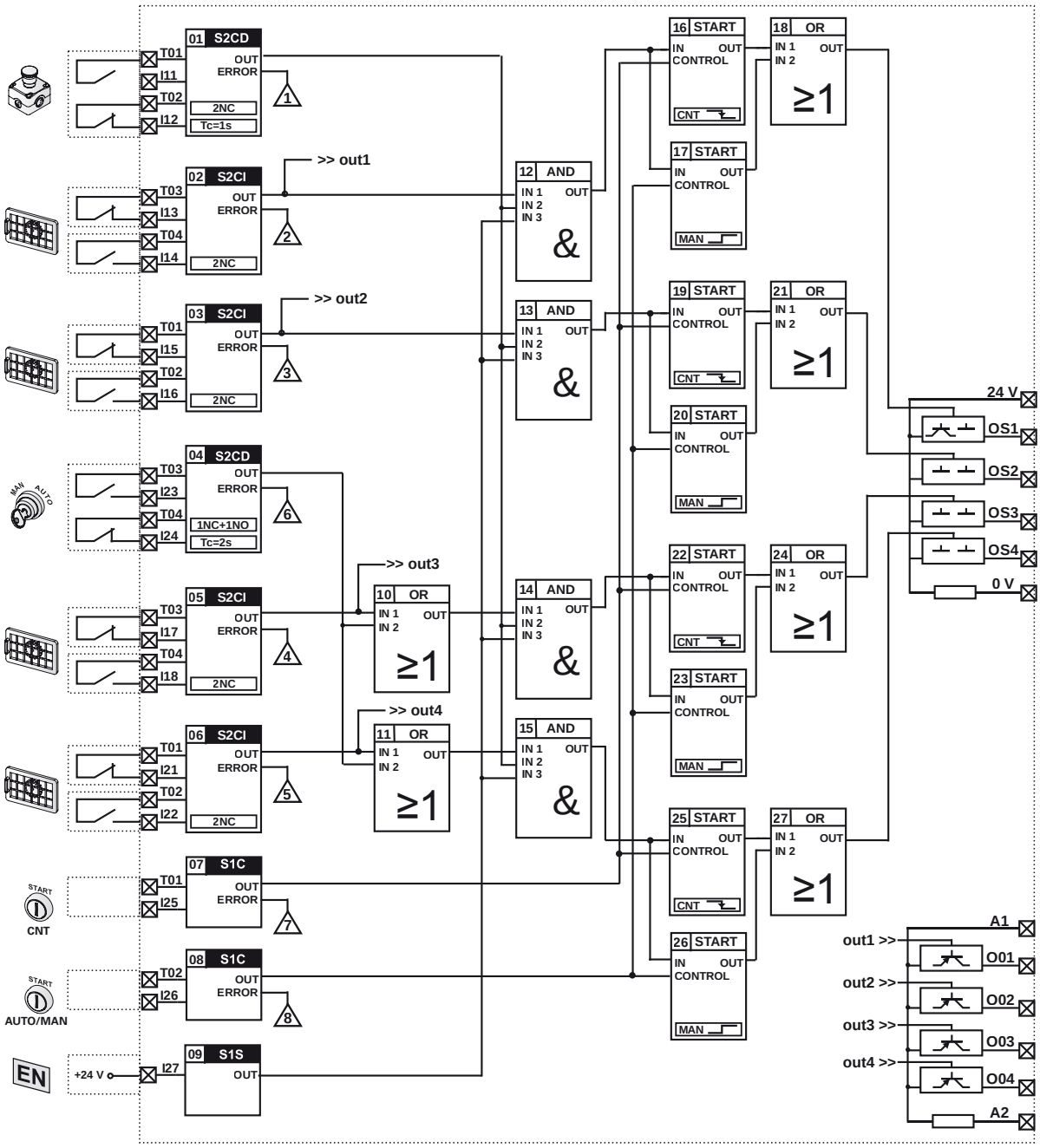

Pre-programmed module **CS MF202M0-P6**

Product code
CS MF202M0-P6

Main functions
- Monitoring of 2 guards
- 1 bypass
- 1 emergency stop
- Automatic start or monitored manual start
- General enabling signal
- Selectable On/Off delay
- 4 way time selector

Outputs
- Three instantaneous outputs and one timed PNP safety output
- 4 PNP signalling outputs

Technical data: see CS MP202M0
Dimensions, cable cross sections, terminal tightening torque: page 284, design C
Internal wiring diagram: page 286
Terminal layout: page 286

Application program: P6

The application program stored in the module executes one or more safety functions, as shown in the following block diagram:

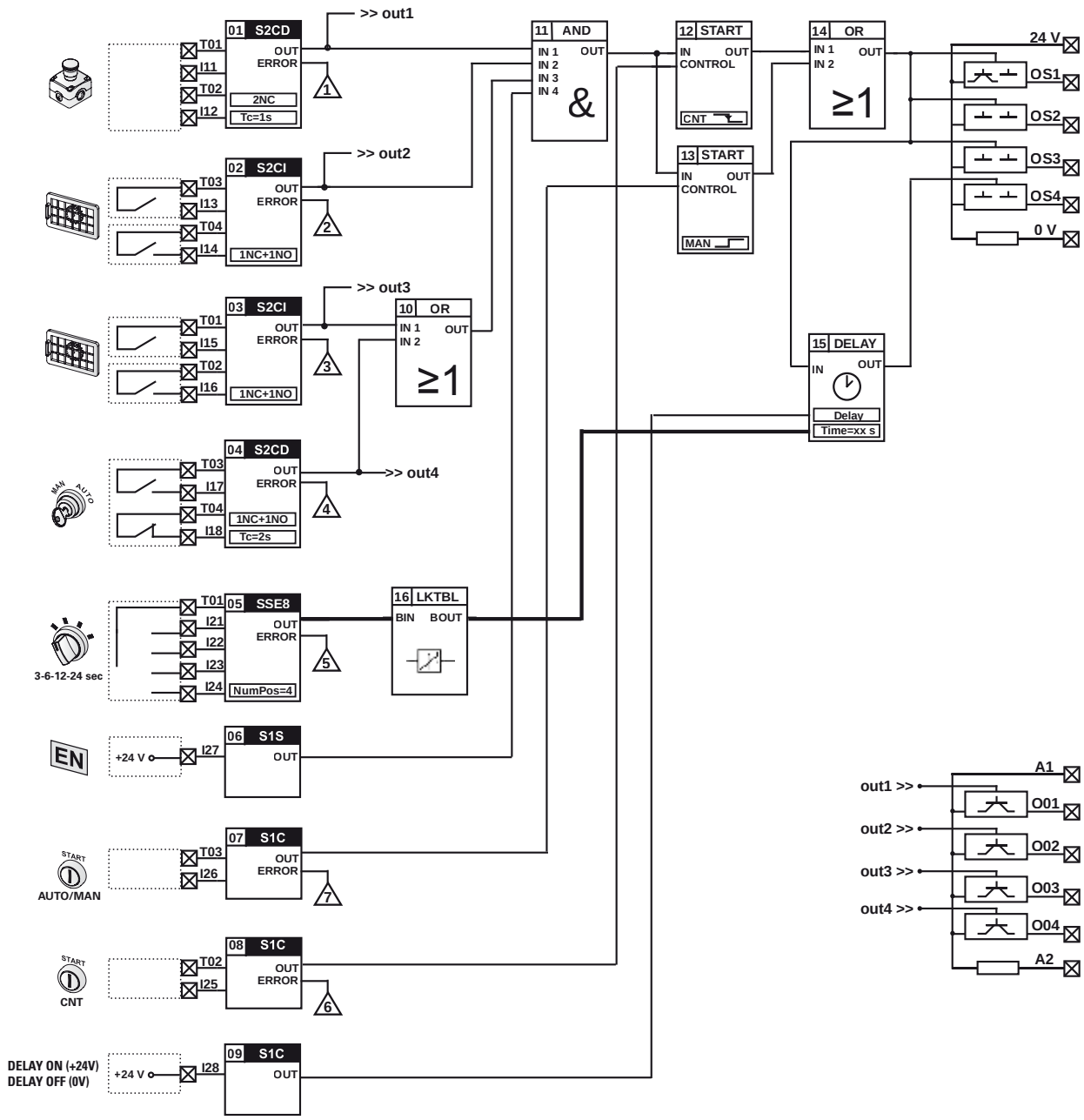

Pre-programmed module **CS MF202M0-P7**

Product code
CS MF202M0-P7

Main functions
- Monitoring of 4 guards with door lock equipped switches, "D" principle (door locked with de-energised solenoid)
- 1 emergency stop
- Monitored start

Outputs
- 2 instantaneous outputs and 2 timed PNP safety outputs with a 4 way time selector
- 4 PNP signalling outputs
- OS4 output for door locking control

Technical data: see CS MP202M0
Dimensions, cable cross sections, terminal tightening torque: page 284, design C
Internal wiring diagram: page 286
Terminal layout: page 286

Application program: P7

The application program stored in the module executes one or more safety functions, as shown in the following block diagram:

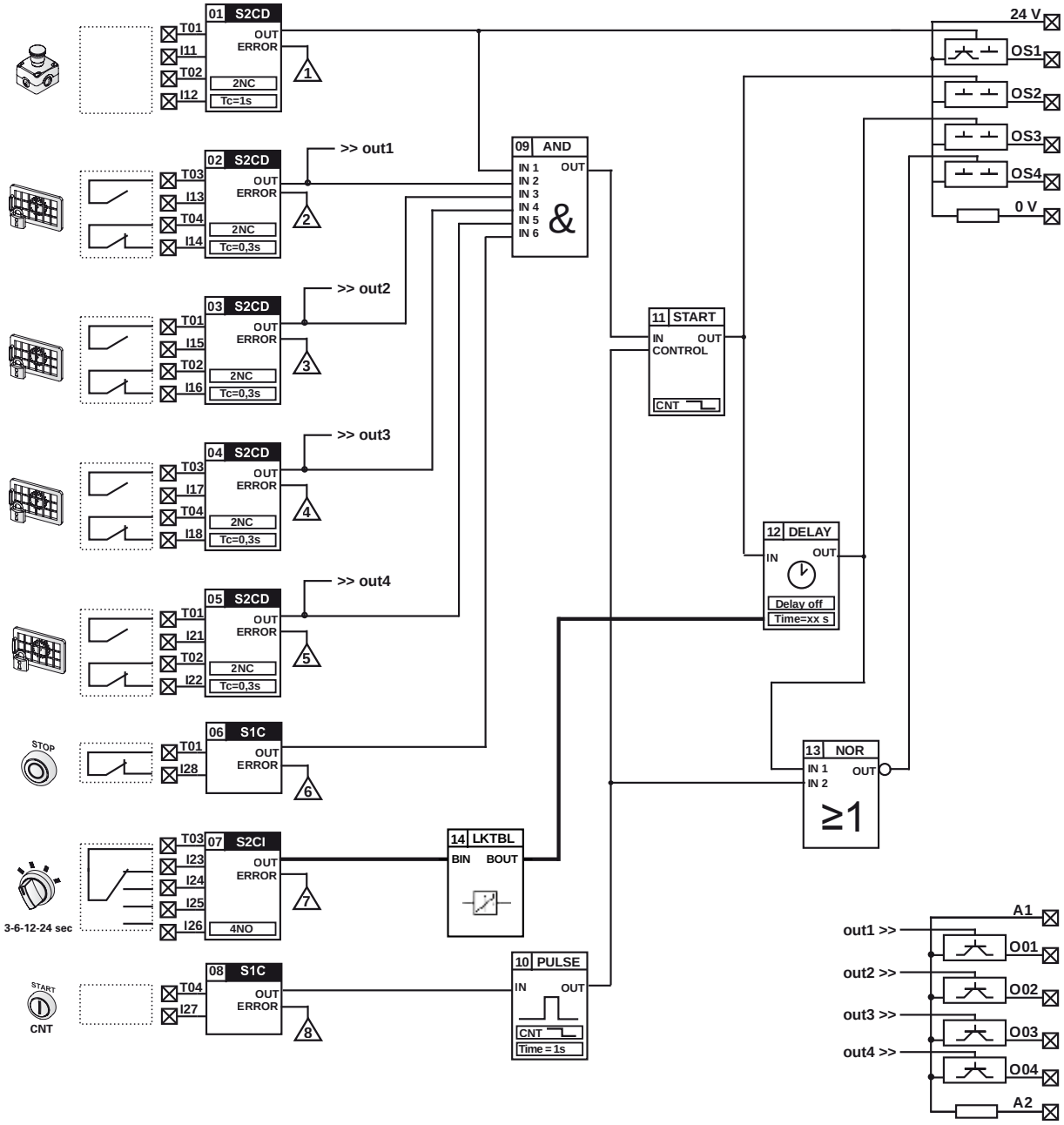

Pre-programmed module **CS MF202M0-P8**

Product code
CS MF202M0-P8

Main functions
- Monitoring of 4 guards with door lock equipped switches, "E" principle (door locked with energised solenoid)
- 1 emergency stop
- Monitored start

Outputs
- 2 instantaneous outputs and 2 timed PNP safety outputs with a 4 way time selector
- 4 PNP signalling outputs
- OS4 output for door locking control

Technical data: see CS MP202M0
Dimensions, cable cross sections, terminal tightening torque: page 284, design C
Internal wiring diagram: page 286
Terminal layout: page 286

Application program: P8

The application program stored in the module executes one or more safety functions, as shown in the following block diagram:

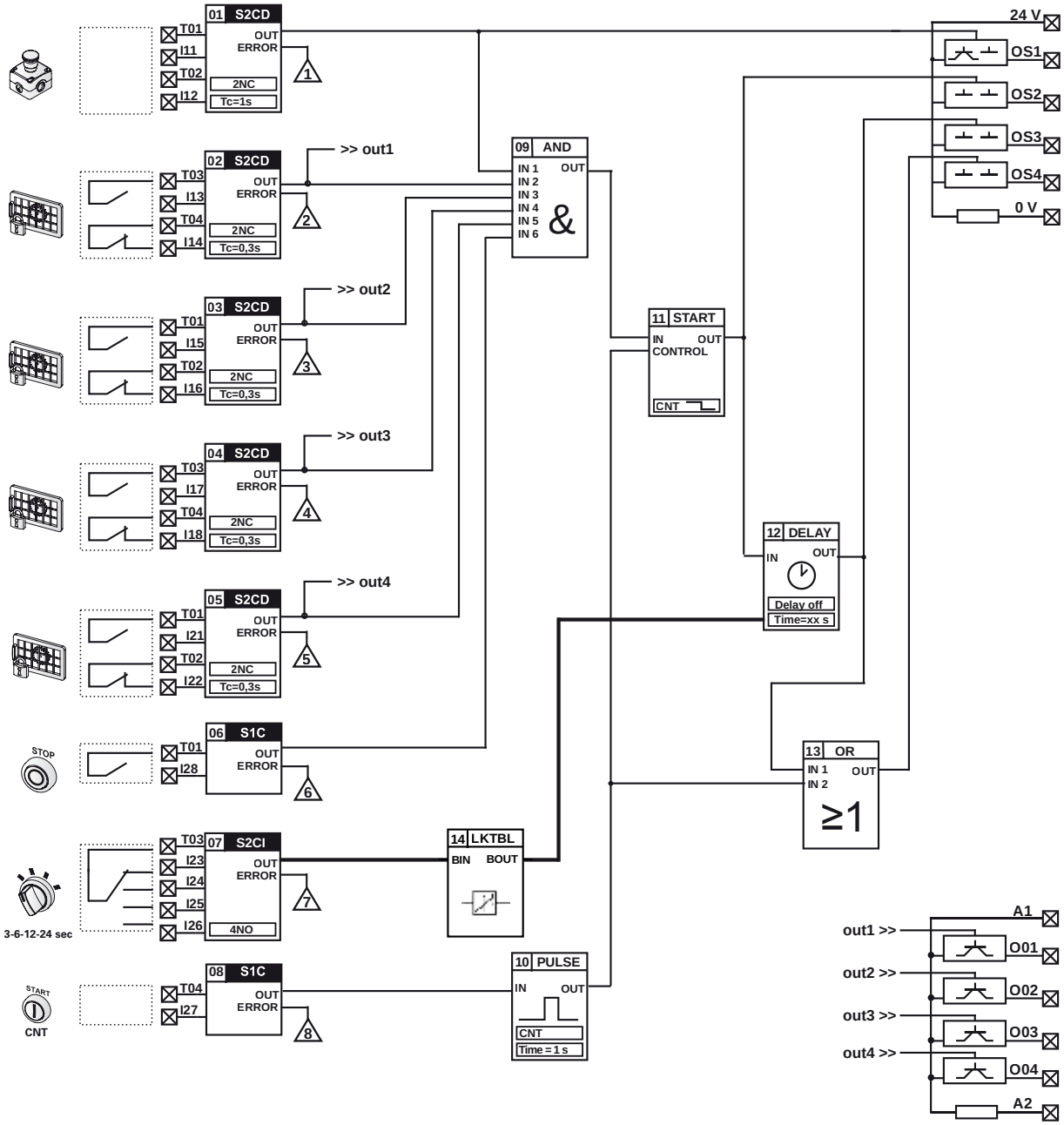

Utilization requirements

Notes: The positions of the contacts shown in the diagram are shown only as examples, and they refer to expected working conditions, with machinery in operation, guards closed, and safety devices not activated. For further explanations, please see documentation relating to each specific safety function (page 280).

Legend

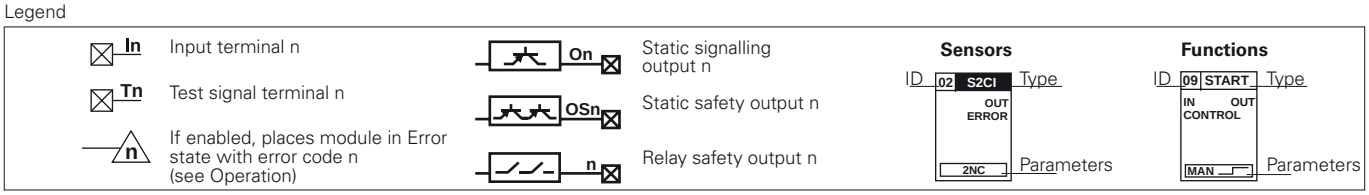

Disclaimer:
Subject to modifications without prior notice and errors excepted. The data given in this sheet are accurately checked and refer to typical mass production values. The device descriptions and its applications, the fields of application, the external control details, as well as information on installation and operation, are provided to the best of our knowledge. This does not in any way mean that the characteristics described may entail legal liabilities extending beyond the "General Terms of Sale", as stated in the Pizzato Elettrica general catalogue. Customers/users are not absolved from the obligation to read and understand our information and recommendations and pertinent technical standards, before using the products for their own purposes.

Definitions

Application program: The internal software component of this module which is aimed at the application.
"Power On" state: The device state, which lasts from the time it is switched on until the end of the internal controls.
"Run" state: The device state on completion of the "Power-On" phase (if no errors have been detected) in which the Application program is run.
"Error" state: The device state when a fault is detected. In this state the module is placed in a safe condition, that is, with all safety outputs open.
Fault: A fault can be internal or external to the safety module. Internal faults are autonomously detected by the module thanks to its redundant and self-monitored structure. An external fault can be detected by the application program. It follows that the definition of external fault is strictly dependent on the application (see note A).

Operation

When supplied with power, the module enters the Power-On state and runs an internal self-diagnosis. In this phase, the two processor LEDs (P1, P2) remain illuminated red for about 1 second. If the internal tests are completed without malfunction, the two LEDs are switched off, the module enters the Run state, and runs the application program. If the start tests are not passed, the module enters the Error state and the malfunction is indicated by the processor LEDs remaining illuminated red.
The green LEDs relating to the power supply and the module inputs are not controlled by processors, and they immediately begin indicating the states of the respective inputs/outputs.
When the module is in the RUN state, and no faults are detected, the two LEDs (P1, P2) remain switched off.
In the Run state, the module can detect faults external to the module, for example caused by short circuits, or invalid input states (see note A).
Depending on the fault type detected, the application program may place the module in error state, to highlight the malfunction. In this case, the application program can communicate an error code by making the LEDs (P1, P2) blink in sequence.
During the Run state, simultaneously with application program execution, the module constantly runs a series of internal tests to check for correct hardware operation. If a malfunction is detected, the module state changes to Error.
Once in Error state, the module is placed in a safe condition, that is with all the safety outputs open; the application program is no longer evaluated, and neither are the system inputs. Furthermore, the static signalling outputs are left unaltered (changes in inputs do not affect them) at the value imposed by the application program before entering the error state. To reset the module, just switch it off for the required duration (see technical data) and then switch it on again.

Note A: A short circuit is not always a fault. For example, in the case of an ordinary push button for emergency stops equipped with two NC contacts, contact opening is the signal to be evaluated and a short circuit between the two contacts is a fault. In contrast, in the case of a safety mat with 4-wire technology, the opposite is true, i.e. a short circuit between the wires is the signal to be evaluated whereas wire interruption is a fault.

Fault signalling

LED PWR		LED P1 and P2		Possible fault cause
OFF	○	OFF	○	No power supply, incorrect connections, power wires cut, external fuses broken. Module fault.
Green	●	OFF	○	Normal operation.
Green	●	Red	●	Non-restorable fault. Recommended action: Send module for repair.
Green	●	Red x 1 Blue x 1	●))) 1 ●))) 1	Restorable fault: Overcurrent on Tx or Ox outputs. Recommended action: Disconnect the static signalling outputs (Ox) and the test outputs (Tx) to check whether an external short circuit is present.
Green	●	Red x 1 Blue x 2	●))) 1 ●))) 2	Restorable fault. Problem detected on OSx (short circuit towards earth or positive, or else short circuit between two OSx). Suggested action: Disconnect the safety outputs to check if there are any problems on the external connections of the OSx outputs.
Green	●	Red x 1 Blue x 3	●))) 1 ●))) 3	Restorable fault. Module temperature outside the limits. Recommended action: Restore module temperature to within permissible limits.
Green	●	Blue x N	●))) N	Error status entered by module at the request of the application program. Error code N. Typically due to incorrect input conditions (external short circuits, status not permitted). Recommended action: Suggested action: Disconnect the inputs to find any short circuits. Check the documentation supplied with the application program for further details.

Quick description of the main safety functions (CS MF•••••)

SENSORS

Sensor	S1C	Monitoring of one contact
Outputs	OUT	The OUT output is active when the input is closed and there is no error.
	ERROR	The ERROR output is active in the case where an electrical malfunction is detected in the input signal
Parameters	None	
Examples		Start button; Stop button; Simple contact

Sensor	S1S	Monitoring of one static signal
Outputs	OUT	The OUT output is active when a 24Vdc signal is present on the input
Parameters	None	
Examples		Generic sensors with PNP output; Enabling signals

Sensor	S2CD	Monitoring of two dependent contacts
Outputs	OUT	The OUT output is active when both inputs are in normal or safety state and there is no error
	ERROR	The ERROR output is active in the case where simultaneity times are not respected, or in the case where an electrical malfunction is detected at the input signals
Parameters	2NC / 1NO+1NC	Contact position in normal or safety state
	Tc	Maximum simultaneity time in seconds
Examples		Emergency stop button; Rope switch; Switch with two connected contacts; Modal selectors with two changeover positions; Two distinct switches with time interdependence

Sensor	S2CI	Monitoring of two independent contacts
Outputs	OUT	The OUT output is active when both inputs are in normal or safety state and there is no error
	ERROR	The ERROR output is active in the case where an electrical malfunction is detected in the input signals
Parameters	2NC / 1NO+1NC	Contact position in normal or safety state
Examples		Two switches; Magnetic sensor

Sensor	SSE8	2 to 8 position modal selector
Outputs	OUT	The output gives a numerical value of 1 to 8 corresponding to the same active input, 0 in case of error
	ERROR	The ERROR output is active in the case where several inputs or no input are active, or in the case where an electric malfunction is detected in the input signals
Parameters	NumPos	Number of input contacts (from 2 to 8)
Examples		Modal selectors with a common contact and a number of outputs ranging from 2 to 8

FUNCTIONS

Function	AND	AND logical function
Outputs	OUT	The OUT output is only activated where all IN input signals are present

Function	DELAY	Delayed process activation/deactivation
Outputs	OUT	The OUT output is activated in the presence of the IN input signal with a Td delay (Don type parameter) The OUT output is deactivated in the absence of the IN input signal with a Td delay (Doff type parameter)
Parameters	Don / Doff	Delay type, at Don (delay-on) activation or at Doff (delay-off) deactivation
	Td	Activation or deactivation delay period

Function	NOR	NOR logical function
Outputs	OUT	The OUT output is only activated in the absence of all the IN input signals

Function	OR	OR logical function
Outputs	OUT	The OUT output is only activated in the presence of at least one IN input signal
Function	PULSE	Activation of a process for a short time
Outputs	OUT	The OUT output is activated on the IN signal falling edge and remains active for the time set by Tp
Parameters	Tp	Pulse duration

Function	START	Activation of a process
Outputs	OUT	The OUT output is activated, if the signal at the IN input is present, on the edge (see parameter) of the CONTROL signal. It therefore remains active as long as IN is present
Parameters	MAN / CNT	MAN = activation on the rising edge, CNT = activation on the falling edge
Function	LKTBL	Lookup table: Conversion table between same type data
Outputs	BOUT	Output converted data. 0 at start.
Parameters	Number of data	Number of data present in the table

Design A, housing thickness 22.5 mm

Connection data

Terminals tightening torque:	0.5 ... 0.6 Nm
Cable cross section:	0.2...2.5 mm²
	24 ... 12 AWG

Installation
Snap mounting to DIN rail

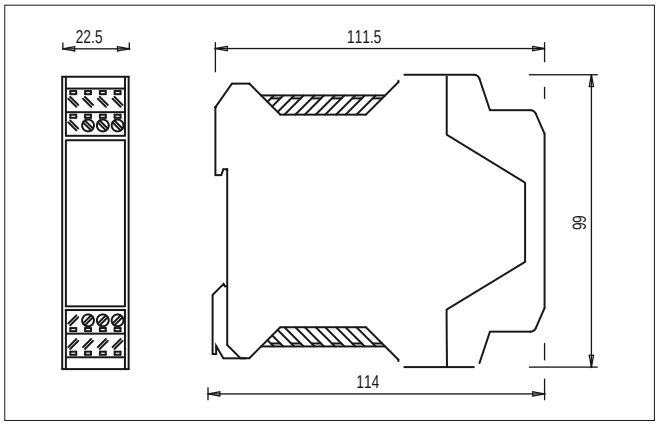

Connector with screw terminals

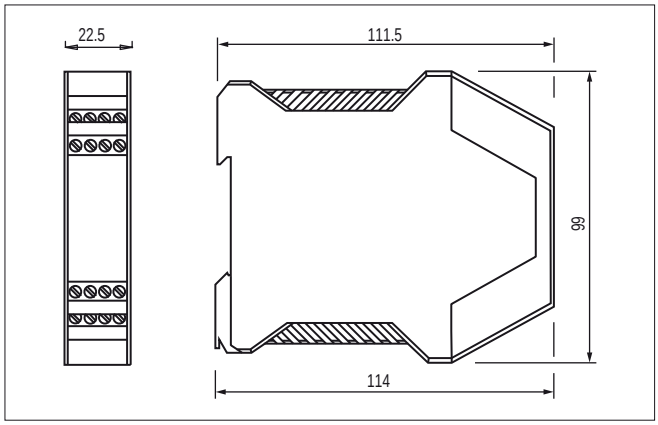

Screw terminals

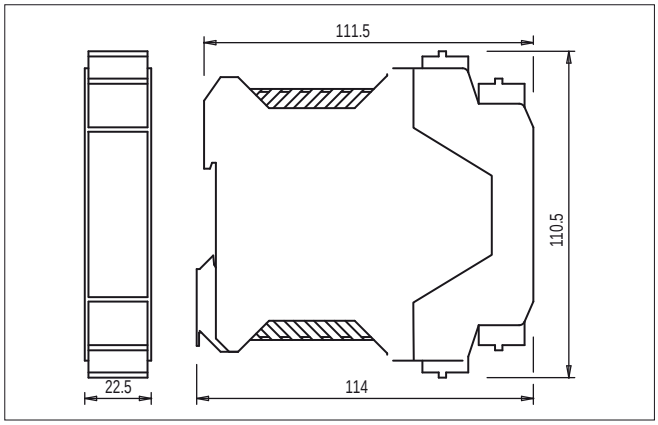

Connector with spring terminals

Design B, housing thickness 22.5 mm

Connection data

Terminals tightening torque:	0.5 ... 0.6 Nm
Cable cross section:	0.2...2.5 mm²
	24 ... 12 AWG

Installation
Snap mounting to DIN rail

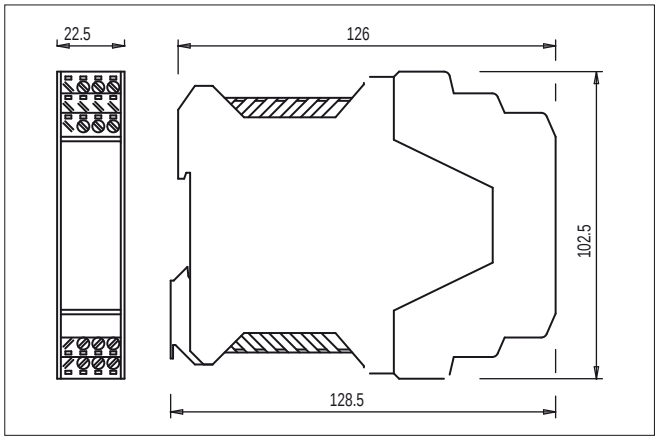

Connector with screw terminals

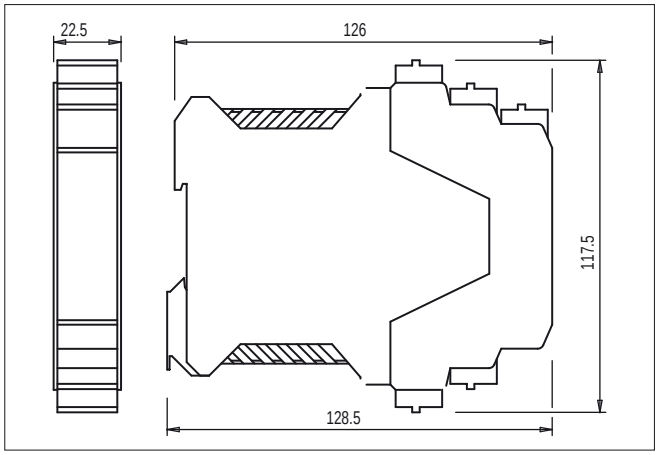

Connector with spring terminals

Design C, housing thickness 45 mm

Connection data

Terminals tightening torque:	0.5 ... 0.6 Nm
Cable cross section:	0.2...2.5 mm²
	24 ... 12 AWG

Installation
Snap mounting to DIN rail

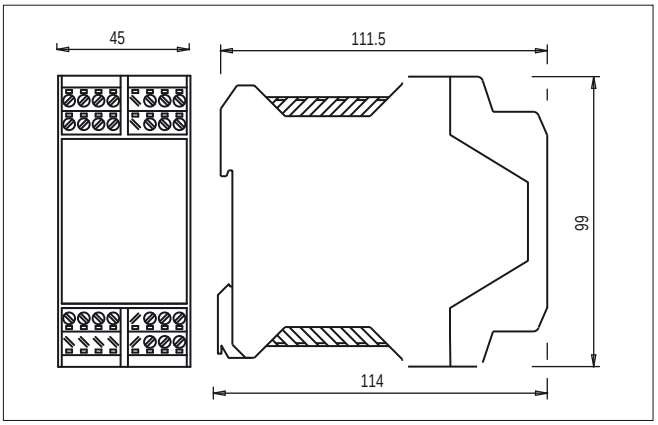

Connector with screw terminals

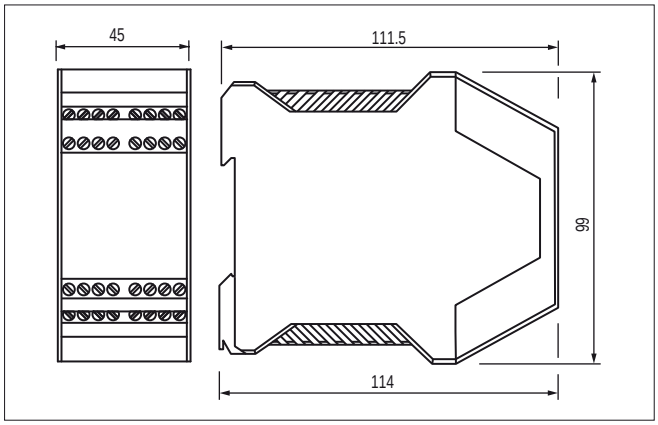

Screw terminals

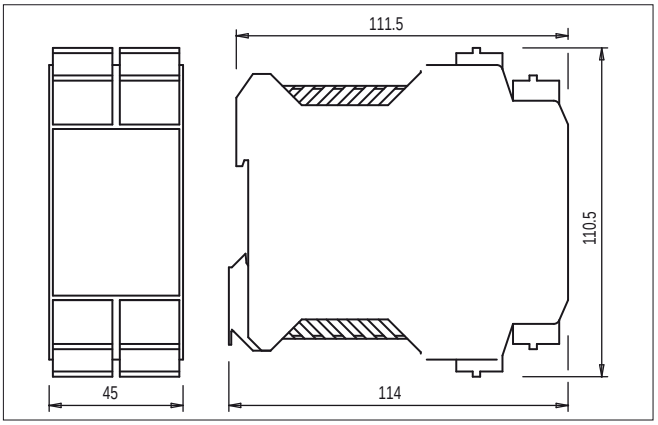

Connector with spring terminals

Design D, housing thickness 22.5 mm

Connection data

Terminals tightening torque:	0.5 ... 0.6 Nm
Cable cross section:	0.2...2.5 mm²
	24 ... 12 AWG

Installation
Snap mounting to DIN rail

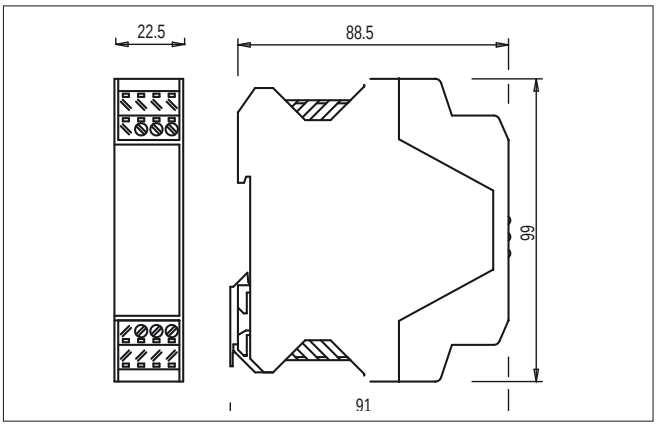

Connector with screw terminals

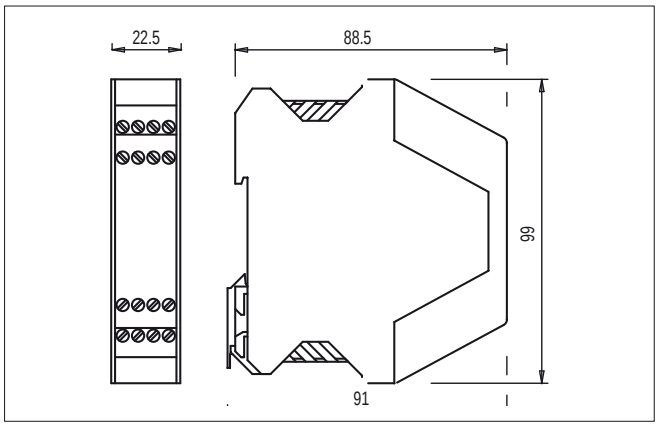

Screw terminals

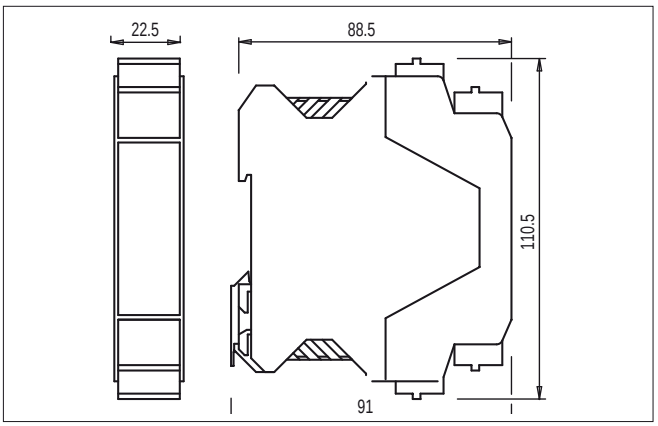

Connector with spring terminals

Design E, housing thickness 67.5 mm

Connection data

Terminals tightening torque:	0.5 ... 0.6 Nm
Cable cross section:	0.2...2.5 mm²
	24 … 12 AWG

Installation
Snap mounting to DIN rail

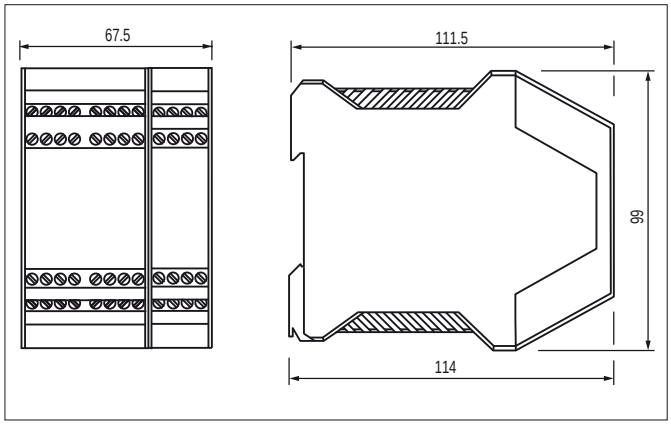

Screw terminals

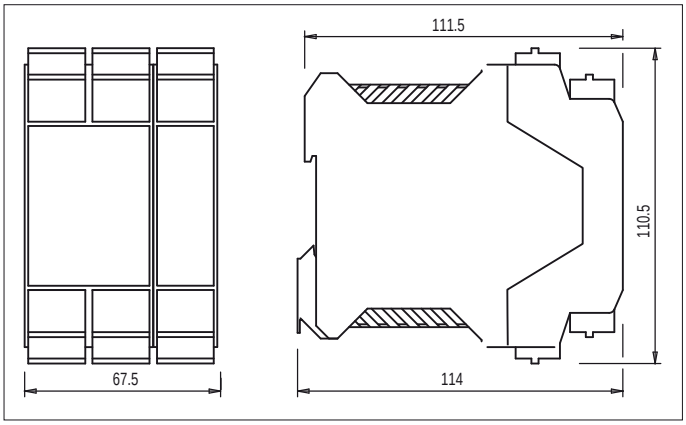

Connector with spring terminals

Design F, housing thickness 90 mm

Connection data

Terminals tightening torque:	0.5 ... 0.6 Nm
Cable cross section:	0.2...2.5 mm²
	24 … 12 AWG

Installation
Snap mounting to DIN rail

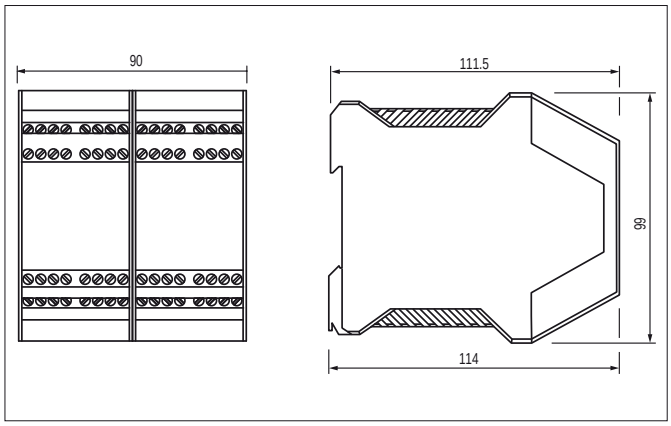

Screw terminals

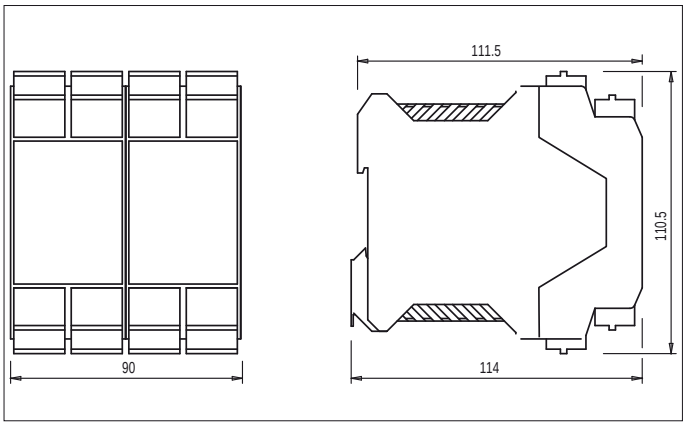

Connector with spring terminals

CS MF series terminal layout

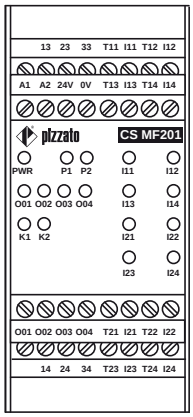

CS MF201

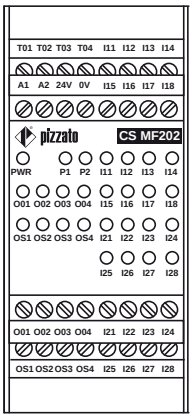

CS MF202

CS MF series internal wiring diagram

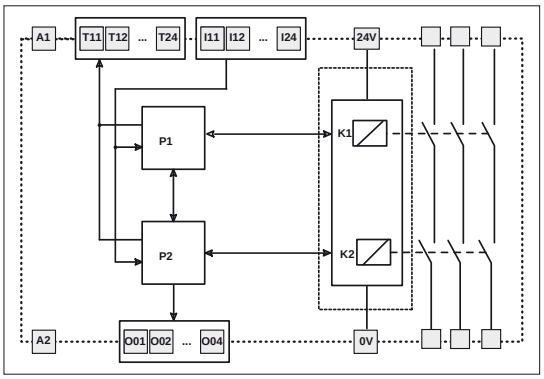

CS MF201

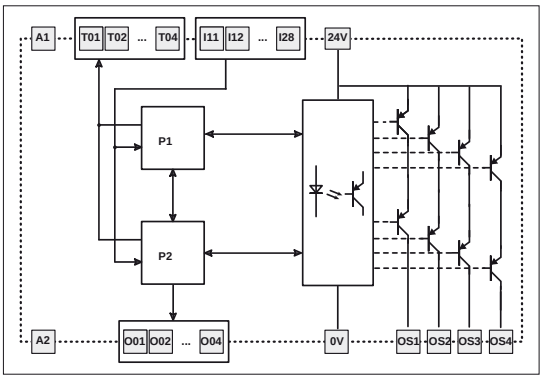

CS MF202